This is a digital copy of a book that was preserved for generations on library shelves before it was carefully scanned by Google as part of a project to make the world's books discoverable online.

It has survived long enough for the copyright to expire and the book to enter the public domain. A public domain book is one that was never subject to copyright or whose legal copyright term has expired. Whether a book is in the public domain may vary country to country. Public domain books are our gateways to the past, representing a wealth of history, culture and knowledge that's often difficult to discover.

Marks, notations and other marginalia present in the original volume will appear in this file - a reminder of this book's long journey from the publisher to a library and finally to you.

Usage guidelines

Google is proud to partner with libraries to digitize public domain materials and make them widely accessible. Public domain books belong to the public and we are merely their custodians. Nevertheless, this work is expensive, so in order to keep providing this resource, we have taken steps to prevent abuse by commercial parties, including placing technical restrictions on automated querying.

We also ask that you:

+ *Make non-commercial use of the files* We designed Google Book Search for use by individuals, and we request that you use these files for personal, non-commercial purposes.
+ *Refrain from automated querying* Do not send automated queries of any sort to Google's system: If you are conducting research on machine translation, optical character recognition or other areas where access to a large amount of text is helpful, please contact us. We encourage the use of public domain materials for these purposes and may be able to help.
+ *Maintain attribution* The Google "watermark" you see on each file is essential for informing people about this project and helping them find additional materials through Google Book Search. Please do not remove it.
+ *Keep it legal* Whatever your use, remember that you are responsible for ensuring that what you are doing is legal. Do not assume that just because we believe a book is in the public domain for users in the United States, that the work is also in the public domain for users in other countries. Whether a book is still in copyright varies from country to country, and we can't offer guidance on whether any specific use of any specific book is allowed. Please do not assume that a book's appearance in Google Book Search means it can be used in any manner anywhere in the world. Copyright infringement liability can be quite severe.

About Google Book Search

Google's mission is to organize the world's information and to make it universally accessible and useful. Google Book Search helps readers discover the world's books while helping authors and publishers reach new audiences. You can search through the full text of this book on the web at `http://books.google.com/`

HOUSE

AUTOMATIC

IPMENT

ortation
rary
F
25
V 5 3
1920

Instruction Book No. 5038

April, 1920

(Superseding Issue of July, 1918)

WESTINGHOUSE QUICK-ACTION AUTOMATIC BRAKE EQUIPMENT

LIBRARY
UNIVERSITY OF MICHIGAN

Copyright, 1920, by the
WESTINGHOUSE AIR BRAKE COMPANY
PITTSBURGH, PA.

PREFACE

This publication covers the air brake apparatus which was in general use until the No. 6 ET Equipment became standard for locomotives, the Type L Triple Valve for passenger cars and the Type K Triple Valve for freight service.

The present edition of this book is in the nature of a revision of the 1902 edition of "The Westinghouse Air Brake Instruction Book." Much of the matter included in the 1902 edition has been omitted since it is now presented at greater length and more in detail in other publications, such as Instruction Pamphlet No. 5036, "Westinghouse Steam Driven Air Compressors"; Instruction Pamphlet No. 5027, "Combined Automatic and Straight-Air Engine and Tender Equipment"; and Instruction Pamphlet No. 5028, "High Speed Brake and Double-Pressure Control Apparatus." This issue, however, includes a description of the principles of operation of the brake as a whole which will apply fundamentally to any of our Quick-Action Automatic Brake Equipments.

Price of this Instruction Pamphlet, single copies, 50 cents.

WESTINGHOUSE AIR BRAKE CO.,

April, 1920 Pittsburgh, Pa.

INDEX

PAGE

The Air Brake 1
The Plain Automatic Air Brake 2
The Quick-Action Automatic Air Brake 5
Parts of the Equipment 6
Steam Compressor Governor (Single and Duplex) 14
Air Compressor 25
Main Reservoir 26
Engineer's Brake Valve 27
Duplex Air Gage 32
Feed Valve 33
Plain Triple Valve 38
Quick-Action Triple Valve 42
Auxiliary Reservoir 45
Brake Cylinder 46
Piston Travel 49
Conductor's Valve 50
Pressure-Retaining Valve 51
Brake Pipe Fittings 58
Operation of the Equipment 62
Running 62
Service Application 67
Holding Brakes Applied 73
Release and Recharge 74
Emergency Application 75
Handling Brakes in Train Service 78
Charging and Testing 79
Operating Instructions 80
Running 80
Service Application 81
Holding Brakes Applied 82
Releasing 83
Emergency 85
Double-Heading 85
General 86
Cleaning and Oiling the Triple Valve and Brake Cylinder 90
Piping 95
Foundation Brake Gear 96
American Driver Brakes 97

WESTINGHOUSE QUICK-ACTION AUTOMATIC AIR BRAKE EQUIPMENT

THE AIR BRAKE

The equipment herein described is that which for years has been and is now being used on many railroads. It should be understood, however, that much of the apparatus has been superseded by later forms of the same device or entirely new devices or combinations; for example, the entire engine and tender equipment is superseded by the "ET" locomotive brake equipment (described in Instruction Pamphlet 5032), the Type H (old standard quick-action) by the Type K (new standard quick-service) Freight Triple Valve (Instruction Pamphlet 5030), and so on.

The *air brake,* as used on railroads, is a combination of parts, controlled and operated by compressed air, by means of which the motion of trains is retarded or stopped. This is accomplished by the use of a mechanism, by means of which brake shoes are forced against the wheels, and the force of friction between the shoes and the wheels then tends to oppose and retard the rotation of the wheels and thus slow down the speed of the train, bringing it finally to stop if the brake is left applied.

In order to obtain the compressed air and use it for the purpose stated, there is necessary:

(1) A source of compressed air supply, called the *Air Compressor.*

(2) An operating valve, by means of which the engineer can manipulate the brakes, called the *Brake Valve.*

(3) Means of connection between the brake valve and the brake apparatus on each vehicle in the train. This is a pipe, called the *Brake Pipe,* connected between the different vehicles by flexible hose connections and closed at the end of the train.

(4) Means of transforming the power stored in the compressed air into mechanical force on each vehicle. The device for accomplishing this is called the *Brake Cylinder.*

(5) Suitable connections, such as rods and levers, for transferring the mechanical force developed in the Brake Cylinder to the Brake Shoes and applying them to the wheels. This is called the *Foundation Brake Gear.*

(6) Means for using the force transmitted through the Foundation Brake Gear so as to retard the rotation of the wheels. This is provided for by the *Brake Shoes.*

The above list includes those parts that must be used in order to obtain the results desired, but for practical purposes additional devices, such as compressor governors, storage reservoirs, feed valves, air gages, and so on, are employed, the use and construction of which will be fully explained later.

PLAIN AUTOMATIC AIR BRAKE

An *Automatic* air brake system is one so constructed that the brake will be applied *automatically* in case of an accident, which permits air to escape from the system. To accomplish this there is added to each vehicle equipped as above: 1st, a Reservoir called an *Auxiliary Reservoir,* in which a supply of compressed air is stored

sufficient to operate the brake on that vehicle, and 2nd, a device called a *Triple Valve,* to which the brake pipe, auxiliary reservoir and brake cylinder are all connected, which serves to control the flow of air (1) from the brake pipe to the auxiliary reservoir when charging, (2) from the auxiliary reservoir to the brake cylinder when applying, and (3) from the brake cylinder to the atmosphere when releasing the brake. When the brakes are not being used the brake pipe and all auxiliary reservoirs in the train are charged and maintained at a fixed normal pressure. The brake is applied by reducing the pressure in the brake pipe *below that in the auxiliary reservoirs.* Such a reduction is caused by an opening being made from the brake pipe or its connections to the atmosphere and may be *intentional,* as when the engineer opens the brake pipe to the atmosphere through the brake valve, or *accidental* as in the case of a burst hose or broken pipe. The reduction in brake pipe pressure thus made destroys the equality of brake pipe and auxiliary reservoir pressures, which existed when the brake system was fully charged, and the auxiliary reservoir pressure, which is then higher than that in the brake pipe, causes the triple valve on each car to operate so as to apply the brakes by admitting compressed air from the auxiliary reservoir to the brake cylinder, where it exerts its pressure on a piston, pushing it outward and thus through the rods and levers of the foundation brake gear, forcing the brake shoes against the wheels.

The brake is released by admitting compressed air from the *Main Reservoir* on the locomotive through the

brake valve into the brake pipe, thus *increasing* its pressure above that remaining in the auxiliary reservoir. This causes the triple valve parts to return to their original positions, again opening communication from the brake pipe to the auxiliary reservoir to *recharge* the latter and making a connection through which the compressed air in the brake cylinder escapes to the atmosphere, thus permitting the *Release Spring* in the brake cylinder to return the piston to its former position, which, in turn, permits the rods and levers of the foundation brake gear to be returned to their release positions and the shoes to be drawn away from the wheels, thus releasing the brakes. The functions of the triple valve may then be briefly stated as follows:

(1) When charging and maintaining the pressure in the brake system:

(*a*) to permit air to flow from the brake pipe to the auxiliary reservoir;

(*b*) to prevent air from flowing from the auxiliary reservoir to the brake cylinder;

(*c*) to keep the brake cylinder open to the atmosphere.

(2) When applying the brakes:

(*a*) to close communication from the brake pipe to the auxiliary reservoir;

(*b*) to close communication from the brake cylinder to the atmosphere.

(*c*) to permit air to flow from the auxiliary reservoir to the brake cylinder.

(3) When holding the brakes applied:

to close all communication between the brake pipe, auxiliary reservoir, brake cylinder and atmosphere.

(4) When releasing the brakes and recharging the system:

(*a*) to open communication from the brake cylinder to the atmosphere;

(*b*) to permit air to flow from the brake pipe to the auxiliary reservoir;

(*c*) to prevent air from flowing from the auxiliary reservoir to the brake cylinder.

The way in which the brake valve is handled to produce these results and a full, detailed description of the operation of the triple valve and its various positions is given later. (See pages 62 to 78.)

QUICK-ACTION AUTOMATIC AIR BRAKE

The Westinghouse *Quick-Action Automatic* air brake system is the same, throughout, as the *Plain Automatic* system just described, but with one additional feature, namely:—the triple valve is so modified that when a relatively quick reduction in brake pipe pressure is made, it also opens a direct communication from the brake pipe through the triple valve to the brake cylinder. This not only increases the brake cylinder pressure in proportion to the amount of air flowing into it from the brake pipe, but by venting air from the brake pipe locally on each car, hastens and increases the effect of the reduction made at the brake valve; the net result being to greatly

shorten the time from the movement of the brake valve handle until a full brake application is obtained on the entire train, and to increase the total braking power obtainable by such an operation (called an *Emergency Application* of the brakes), about 20% over the maximum obtainable during ordinary operations (called *Service Applications* of the brake), or when using the Plain Automatic Brake. This difference, as explained, is due solely to the construction of the triple valves, which are called respectively the Plain and the Quick-Action Triple Valve. For all ordinary (Service) applications of the brake, the operation of the two triple valves is identical.

PARTS OF THE EQUIPMENT

The following is a list of the operating parts of the typical Westinghouse Quick-Action Automatic Brake Equipment for *Passenger Service*, as illustrated on the folder, Fig. 1, at the back of the pamphlet, with a brief statement of the purpose of each part.

1. A *Steam Compressor Governor*, which automatically regulates the supply of steam to the compressor, so as to maintain normal air pressure in the main reservoir.

2. A *Steam-Driven Air Compressor*, which furnishes the compressed air for use in the brake system.

3. A *Main Reservoir*, to which the compressed air is delivered from the air compressor, where it is cooled and stored for use in the brake system.

4. A *Duplex Air Gage*, connected to the piping near the brake valve, which shows by a red hand the pressure in the main reservoirs and by a black hand equalizing

reservoir pressure, which is the same as brake pipe pressure.

5. An *Automatic Brake Valve* (with *Feed Valve* attachment), through which

(*a*) air from the main reservoir may be admitted to the brake pipe either

(1) direct, as when charging the train or releasing the brakes, or

(2) through the feed valve, see Fig. 3, as when running over the road and maintaining normal pressure in the system.

Fig. 3—C-6 Feed Valve

(*b*) air from the brake pipe may be allowed to escape to the atmosphere when applying the brakes;

(*c*) the flow of air to or from the brake pipe and the brake system may be prevented, as when holding the brakes applied.

Fig. 4—Plain Triple Valve

6. A *Triple Valve* on each vehicle. That on the locomotive is supported by the piping, Fig. 1, and governs the supply of air to both the driver and truck brake cylinders. On the cars the triple valve is attached to a seat on the brake cylinder head. A *Plain Triple Valve*, Fig. 4, is used on the engine, and a *Quick-Action Triple*

Fig. 5—Quick-Action Triple Valve

Valve, Fig. 5, on the tender and cars. The purpose of the triple valve has already been described.

7. An *Auxiliary Reservoir.* Two are used on the engine, one for the driver brake cylinder and one for the truck brake cylinder, and one on the tender and on each car. It is the direct source of the supply of compressed air which supplies the brake on that particular vehicle.

8. A *Brake Cylinder,* Fig. 6, with a piston and rod so connected through the brake levers and rods to the brake shoes that, when the piston is pushed outward by air pressure, this force is transmitted through said rods and levers to the brake shoes and applies them to the wheels.

9. A *Conductor's Valve* inside each car, which enables the conductor or trainman to apply the brakes if necessary.

10. Various *cut-out cocks, air strainers, hose, couplings,* and other details, the location and uses of which

Fig. 6—Brake Cylinder with Quick-Action Triple Valve

will be readily understood from the diagrams, Figs. 1 and 2, and the descriptions which follow.

11. While not a part of the air brake equipment proper, the *American Automatic Slack Adjuster* is an important auxiliary device, which automatically maintains a fixed piston travel.

The brake system requires one line of pipe, extending throughout the length of the train, and it is called the *Brake Pipe,* because it is the chief pipe or artery of the air brake system and forms the means of communication by which the brakes on each vehicle can be operated from the brake valve. This was formerly called the *Train Pipe,* but it will be at once appreciated that the name *Brake Pipe,* is not only more descriptive of the real purpose of this pipe but also serves to distinguish it more definitely from the *Steam Pipe* and *Air Signal Pipe,* which also extend throughout the length of the train.

The *Train Air Signal System* comprises a signal whistle on the locomotive with the necessary automatic whistle valve, connected by the air signal pipe to a valve on each car by means of which signals may be transmitted from any part of the train to the engineer. The compressed air used for its operation is taken from the main reservoirs of the air brake system through a reducing valve. As the system and its devices are fully described in a separate pamphlet, further reference here is unnecessary.

The operating parts of the typical Westinghouse Quick-Action Automatic Brake Equipment for *Freight Service* are illustrated on the folder, Fig. 2, and, as will be seen, correspond to those listed above for the Passenger equipment, with the following slight differences:

1. A *Plain Triple Valve* is ordinarily used on the tender instead of a quick-action triple valve.

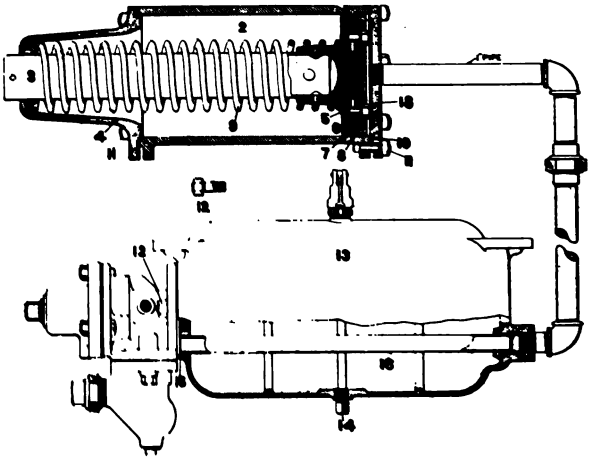

Fig. 7 Freight Brake Cylinder with Detached Reservoir and Triple Valve

2. A *cast iron Auxiliary Reservoir* is used with the car brake equipment and the triple valve, auxiliary reservoir and brake cylinder form a combination unit, known as the *Combined Freight Car Brake Equipment* (see Fig. 2). If the construction of the car is such that the combined equipment cannot be satisfactorily installed, the *Detached Equipment*, as illustrated in Fig. 7, is furnished, the only difference being that the reservoir and brake cylinder are separated as shown on the cut. It is desirable to use

the combined equipment wherever possible, however, in order to avoid the use of the union necessary in the brake cylinder pipe of the detached equipment.

3. The *Conductor's Valve* is not used.

4. A *Pressure Retaining Valve* is connected to the triple valve exhaust and is adjusted by hand to either permit the brake cylinders to exhaust freely to the atmosphere, or to retain a portion of the air in the brake cylinder, when making a release, in order to hold the brakes applied while recharging the system.

5. The *Centrifugal Dirt Collector* is now recommended to replace the brake pipe air strainer shown on folder, Fig. 2, and is connected in the branch pipe

Fig. 8—Installation of Centrifugal Dirt Collector

between the brake pipe and the triple valve as near the triple valve as circumstances will permit, Fig. 8.

The parts shown in Fig. 1, and their arrangement, agree with what was for many years the standard apparatus, but as conditions and methods of operation have changed and progress been made in design and manufacture, certain details of the equipment have been replaced by improved forms or new devices. Those now considered standard are shown in Fig. 2, which is a typical Quick-Action Automatic Brake Equipment for Freight Service.

Both the former and the present standard types of the different devices used will be described in order, beginning with the compressor governor.

STEAM COMPRESSOR GOVERNOR

Type S Governor

The *Single Top, Type S, Steam Compressor Governor,* Fig. 9 (closed position) is located in the steam supply pipe to the air compressor, the end "To Comp." being attached directly to the steam inlet of the compressor. Its purpose is to automatically regulate the supply of steam to the air compressor so as to obtain and maintain a fixed pressure in the main reservoir.

This governor consists of the following parts: 2, Steam Valve Body; 3, Cylinder Body; 4, Cylinder Cap; 5, Steam Valve; 6, Piston; 7, Piston Ring; 8, Piston Nut; 9, Piston Spring; 10, Union Nut; 11, Union Swivel; 15, Diaphragm Body; 16, Spring Box; 17, Check Nut; 18, Regulating Nut; 19, Regulating Spring; 21, Diaphragm Ring; 29, Strainer; 30, Union Swivel; 31, Union

Nut; 32, Diaphragm Nut; 33, Diaphragm Valve; 34, Diaphragm Washer; 35, Diaphragm Valve Spring; 36,

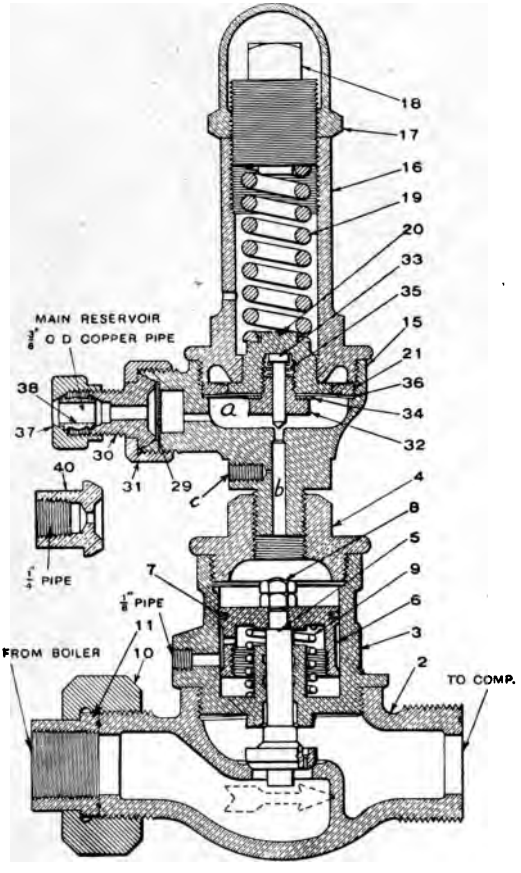

Fig. 9—Type S Single Top Steam Compressor Governor, Closed

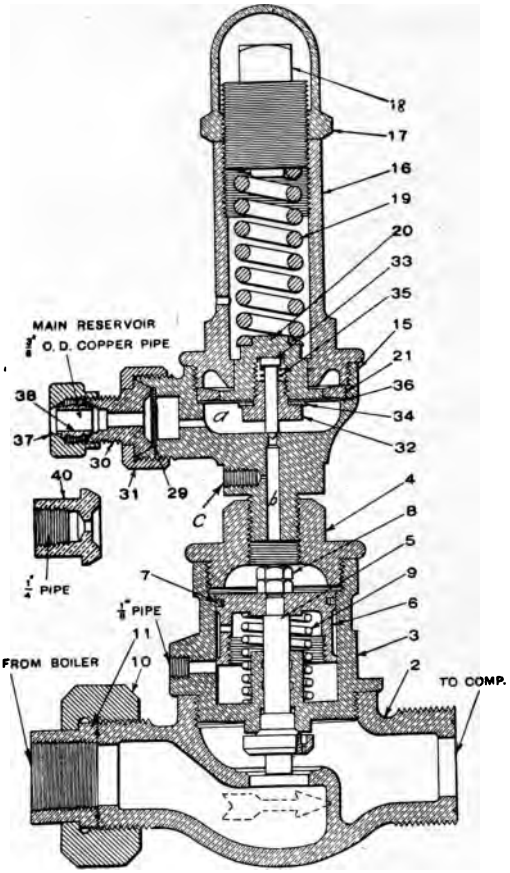

Fig. 10—Type S Single Top Steam Compressor Governor, Open

Diaphragm; 37, Union Nut; 38, Thimble; 40, Union Swivel (for iron pipe connection).

Steam enters at connection marked "From Boiler" and flows past steam valve 5 when open to the compressor at connection marked "To Comp."

The governor is operated by air pressure from the main reservoir, which is always open to the connection marked "Main Reservoir," Fig. 9, and the underside of the diaphragm 36 through a small pipe leading from the main reservoir pipe near the brake valve, Fig. 1. As long as the main reservoir pressure in chamber *a* below diaphragm 36 is not able to overcome the pressure of the spring 19, acting on the top of the diaphragm, spring 19 holds diaphragm 36 down and thereby holds the small pin valve 33 to its seat. The chamber above the governor piston 6 is open through passage *b* and the small relief port *c* to the atmosphere, which permits the spring 9 below piston 6 to hold the latter and the attached steam valve 5 in the *open* position, Fig. 10.

When the main reservoir pressure in chamber *a* below diaphragm 36 becomes slightly greater than the spring pressure above the diaphragm, the diaphragm is raised, unseating pin valve 33 and allowing air from chamber *a* to flow through passage *b* to the chamber above piston 6. This forces piston 6 down to the *closed* position, compressing piston spring 9 and seating steam valve 5, thus cutting off the supply of steam to the air compressor except for the slight amount which can pass through the small port shown in steam valve 5. This is just sufficient to keep the compressor operating slowly so as to

supply the air leakage and avoid troubles from steam condensation.

The chamber below piston 6 is open to the atmosphere through the drip pipe connection on the left. This is to permit the escape of any steam that may leak past the stem of valve 5 or air that may leak past piston 6. To avoid troubles from freezing and stopping up, the drip pipe should be as short as practicable.

The governor is adjusted by means of adjusting nut 18 which regulates the pressure of spring 19 upon the diaphragm. To change the adjustment of the governor, remove cap nut 17 and screw down regulating nut 18 to increase the main reservoir pressure or back off the regulating nut 18 to lower the main reservoir pressure, replacing the cap nut 17 after the desired adjustment is made.

Type SD Governor

The Single Top, Type S, Governor was superseded by the *Duplex, Type SD, Governor,* Fig. 11, which was arranged to obtain what is known as Duplex Main Reservoir Regulation. As will be seen from the cut, the Duplex Governor is the same as the Type S Governor except that two regulating portions, or "tops" are used, with a "T" or "Siamese" fitting to connect them to the steam portion of the governor. The adjustment of the two heads varies according to local conditions, but it is usually 90 lbs. for the "Low Pressure" and 120 lbs. for the "High Pressure" Top. This governor consists of the following parts: 2, Steam Valve Body; 3, Cylinder Body; 4, Cyl-

inder Cap; 5, Steam Valve; 6, Piston; 7, Piston Ring; 8, Piston Nut; 9, Piston Spring; 10, Union Nut; 11, Union Swivel; 14, Siamese Fitting; 15, Diaphragm Body; 16,

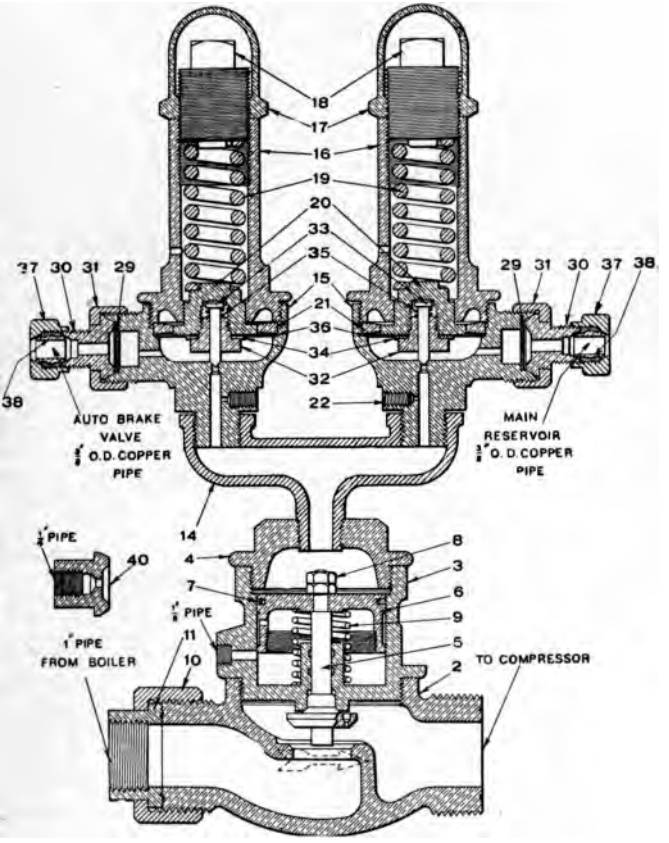

Fig. 11—Type SD Duplex Steam Compressor Governor

Spring Box; 17, Check Nut; 18, Regulating Nut; 19, Regulating Spring; 21, Diaphragm Ring; 22, Vent Port Screw; 29, Strainer; 30, Union Swivel; 31, Union Nut; 32, Diaphragm Nut; 33, Diaphragm Valve; 34, Diaphragm Washer; 35, Diaphragm Valve Spring; 36, Diaphragm; 37, Union Nut; 38, Thimble; 40, Union Swivel.

The "Low Pressure" Top, on the left, is connected to a port in the brake valve, through which air from the main reservoir port flows to the feed valve when the brake valve handle is in *Running* position. When running over the road, therefore, with the brakes released, the "Low Pressure" top of the governor controls the operation of the air compressor in the same manner as has been described for the Type S governor and the "High Pressure" top does not operate at all. When an application of the brakes is made, however, the relation of the brake valve ports is changed so as to shut off the supply of air to the underside of the diaphragm of the "Low Pressure" governor top and its pin valve 33 remains held to its seat. Meanwhile, air from the main reservoir pipe can flow direct to the connection marked "Main Reservoir" of the "High Pressure" governor top and to the chamber beneath its diaphragm. This governor top will consequently control the operation of the air compressor as described for the Type S governor until the brakes are released and the brake valve handle again placed in *Running* position. Only one vent port should be open, the other being plugged by a small screw 22 as shown in Fig. 11. This arrangement permits the com-

pressor to operate while the brakes are released against a comparatively low main reservoir pressure, which is, however, ample to keep the system properly charged and supply any leakage which may exist and requires it to operate against the maximum main reservoir pressure only during the time that the brakes are applied, which relieves the compressor of an unnecessary burden of work and at the same time provides for a high main reservoir pressure to insure a prompt release and recharge of the brakes. This principle is more fully explained in connection with the High Speed Brake and Double Pressure Control (Instruction Pamphlet 5028) and the No. 6 ET Locomotive Brake (Instruction Pamphlet 5032) in which, as well as in the Quick-Action Automatic Brake Equipment, the Type SD has been superseded by the Type SF Duplex Compressor Governor, see Figs. 2 and 12.

Type SF Governor

The only difference between the SD and SF Governors is in the arrangement of the "Low" or (as it is called in the SF Governor) the "Excess Pressure" head. The "Low Pressure" head of the SD governor is arranged to maintain a *fixed main reservoir pressure* during the times that the brakes are released, while the "Excess Pressure" head of the SF governor maintains a fixed *"excess"* of main reservoir pressure over brake pipe pressure under the same conditions. The "High Pressure" or "Maximum Pressure" heads of both types are alike in construction and operation. This governor con-

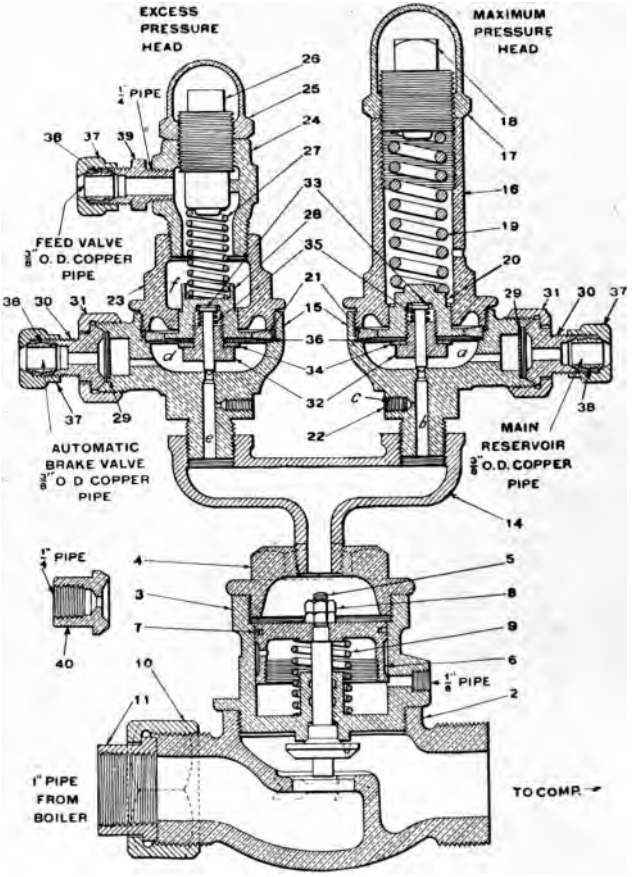

Fig. 12—Type SF Duplex Steam Compressor Governor

sists of the following parts: 2, Steam Valve Body; 3, Cylinder Body; 4, Cylinder Cap; 5, Steam Valve; 6, Piston; 7, Piston Ring; 8, Piston Nut; 9, Piston Spring; 10, Union Nut; 11, Union Swivel; 14, Siamese Fitting; 15, Diaphragm Body; 16, Spring Box for Maximum Pressure Head; 17, Check Nut for Maximum Pressure Head; 18, Regulating Nut for Maximum Pressure Head; 19, Regulating Spring for Maximum Pressure Head; 21, Diaphragm Ring; 22, Vent Port Screw; 23, Spring Box for Excess Pressure Head; 24, Spring Box Extension for Excess Pressure Head; 25, Check Nut for Excess Pressure Head; 26, Regulating Nut for Excess Pressure Head; 27, Regulating Spring for Excess Pressure Head; 29, Strainer; 30, Union Swivel; 31, Union Nut; 32, Diaphragm Nut; 33, Diaphragm Valve; 34, Diaphragm Washer; 35, Diaphragm Valve Spring; 36, Diaphragm; 37, Union Nut; 38, Thimble; 39, Union Stud; 40, Union Swivel.

The "Excess Pressure" head of the SF Governor, Fig. 12, has two air connections. That marked "Automatic Brake Valve" corresponds to the similar connection of the SD Governor. That marked "Feed Valve" leads from the brake pipe, so that air, at whatever pressure the feed valve is adjusted for, is always present in chamber *f*, above diaphragm 36 (in the Excess Pressure Head) when the brake valve handle is in Release or Running positions. The total pressure on the top of diaphragm 36 is, therefore, the pressure in the feed valve pipe plus the pressure of spring 27, which is usually adjusted for 20

pounds. The main reservoir pressure in chamber *d* below diaphragm 36 will, therefore, not be able to raise the diaphragm and its pin valve (and thus shut off the compressor) until it has risen about 20 lbs. above the pressure determined by the feed valve setting. Consequently, whether the setting of the feed valve be changed by accident or design, the same *excess* pressure, 20 lbs., is always maintained. The operation of the steam and air pistons of the governor are the same as already explained for the "Single" and "Duplex" types except that the total pressure on top of diaphragm 36 of the "Excess Pressure" head is *brake pipe pressure plus* 20 *lbs.* (which is the same as the setting of the feed valve plus 20 lbs.) when the brake valve handle is in Release or Running positions, instead of a fixed spring pressure as in the former types. With the feed valve set for 70 lbs., approximately 90 lbs. main reservoir pressure would be obtained and maintained.

It has frequently occurred that governors have been ordered to be adjusted because of apparent erratic action, when the real trouble was in the air gage. Before adjusting governors, therefore, be positive that the air gage is correct.

If the cutting-out pressure gradually increases without any change having been made in the adjustment of the governor, it is probable that dirt has accumulated on the pin valve or its seat, thus slightly raising the valve and increasing the compression of the regulating spring.

If the governor fails to stop the compressor when the desired pressure has been reached, examine the drip pipe

connection to see that it has not frozen or become closed. Also, if the small hole in the spring box becomes closed, and there is a slight leakage of air past the diaphragm, pressure may accumulate above the latter sufficiently to prevent the pin from raising and stopping the compressor.

If, after being stopped by the governor, the compressor fails to start upon a slight reduction in air pressure, examine the pin valve for leakage at the relief port, *c*, when the air pressure is a few pounds less than that for which the governor is regulated. Also if the relief port itself should become stopped up the compressor would fail to start when the air pressure fell.

Keep all parts of the mechanism clean, particularly the strainers 29, Fig. 12, in the air connections. Keep the joints at the stem unions absolutely tight to prevent an escape of oil or steam. Oil will escape with even practically no sign of steam leakage, and the compressor is thereby deprived of part of its lubrication.

We always recommend the use of a $\frac{3}{8}$-inch *copper* tubing between the compressor governors and their proper air connections in the brake system.

AIR COMPRESSOR

Two general types of Air Compressors are used, viz., the Simple and the Cross-Compound. These are fully illustrated and described in separate pamphlets (Westinghouse Steam-Driven Air Compressors, Single Stage Type, Instruction Pamphlet 5036; Compound, Instruction Pamphlet 5026), which will be gladly sent on request.

gage (red hand, main reservoir) and governor pipe; (5) gage (black hand, brake pipe) pipe. These connections are clearly indicated on Figs. 14 and 15 and will be referred to further in the description of the operation of the equipment. There are five different positions of the brake valve handle: (1) *Release,* (at the extreme left); (2) *Running;* (3) *Lap;* (4) *Service Application;* and (5) *Emergency Application* positions. This device consists of the following parts: 2, Body; 3, Rotary Valve Seat; 4, Bottom Case; 5, Bottom Cap; 6, Handle Lock Nut; 7, Handle Nut; 8, Handle; 9, Latch; 10, Latch Spring; 11, Latch Screw; 12, Rotary Valve Key; 13, Key Washer; 14, Rotary Valve; 15, Gage and Equalizing

Fig. 13—G-6 Automatic Brake Valve

Reservoir Tee; 16, Union Nut; 17, Thimble; 18, Equalizing Piston; 19, Piston Ring; 20, Union Nut; 21, Union Swivel; 22, Exhaust Fitting; 23, Union Nut; 24, Union

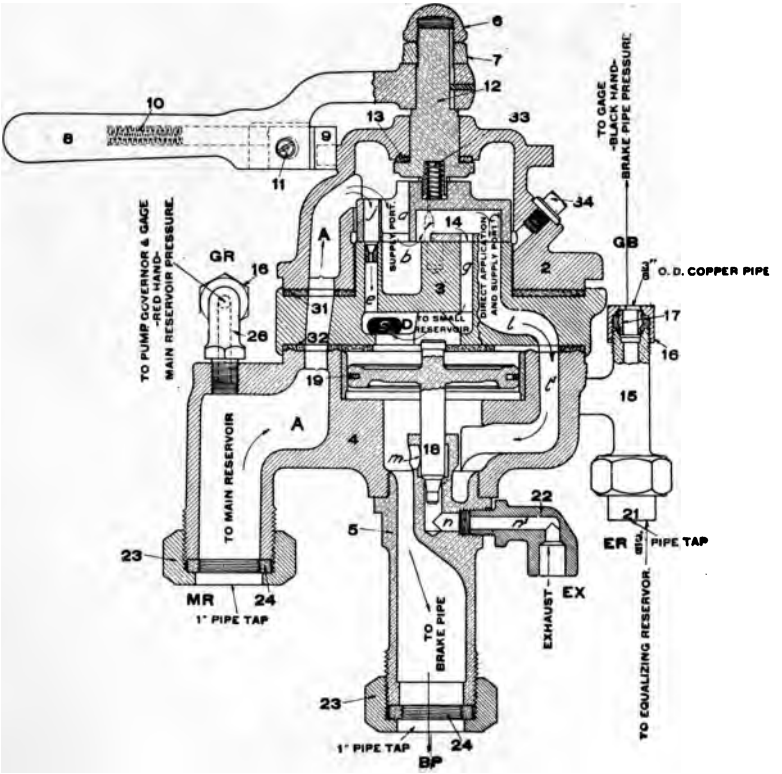

Fig. 14—G-6 Brake Valve, Release Position

Swivel; 25, Holding Nut; 26, Gage Pipe Ell; 27, Feed Valve Gasket; 28, Holding Stud; 29, Bolt and Nut; 30, Stud and Nut; 31, Upper Gasket; 32, Lower Gasket; 33, Rotary Valve Spring; 34, Oil Plug.

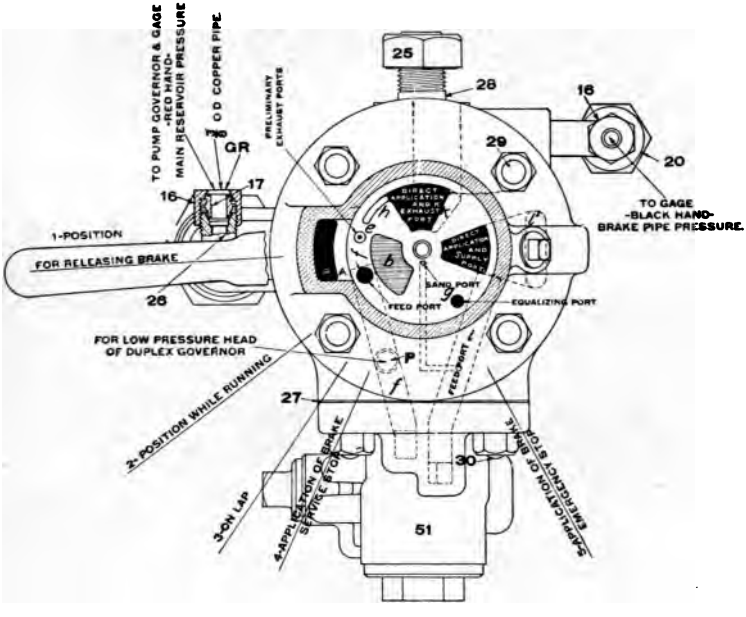

Fig. 15—G-6 Automatic Brake Valve, Plan View

The functions of the different parts of the valve, the flow of air through it in its various positions and the result produced in the brake system are fully explained under the heading "Operation of the Equipment," page

62. It should be clearly understood that the diagrams of the brake valve, as shown on folders, Figs. 37 to 41, are not intended to show the actual construction of the

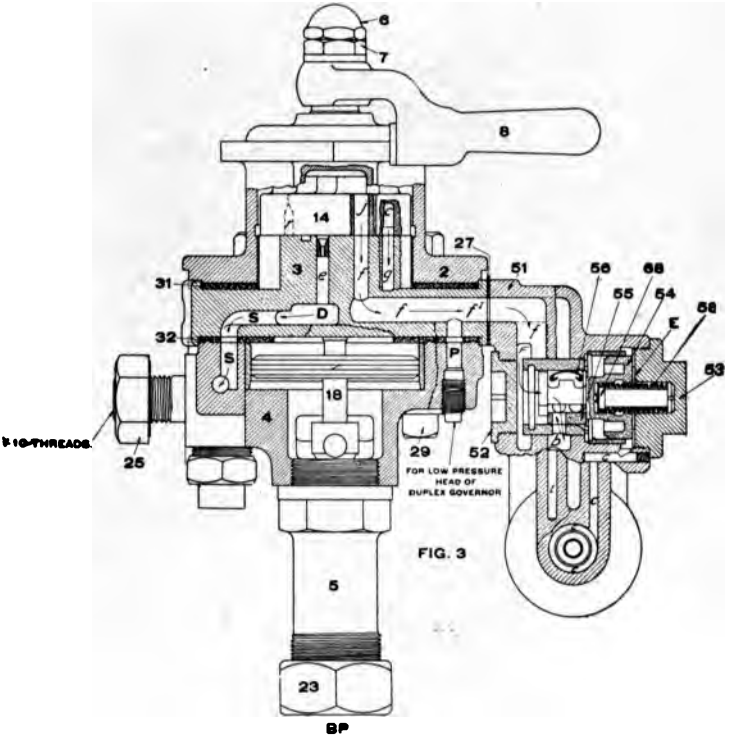

Fig. 16—G-6 Brake Valve, Running Position

valve, but are distorted and drawn so as to represent as simply as possible the connections which are made

between the ports and passageways of the valve in its different positions. For comparison with the actual valve Figs. 14 to 16 are shown, on which the ports of the rotary valve and its seat appear in their true relations and are lettered to correspond with their diagrammatic views of the brake valve in Figs. 37 to 41 inclusive.

The Brake Valve Cut-out Cock is located in the brake pipe under the brake valve and should be closed only on the second engine of a double-header. This is to prevent any possibility of the brakes on the train being interfered with by the second engineer. It is, of course, absolutely necessary that this cock be open on the engine from which the brakes are being handled. If this cock is closed, accidentally or otherwise, it prevents any operation of the brakes by means of the brake valve thus cut out.

DUPLEX AIR GAGE

As previously explained, the Duplex Air Gage has two pipe connections to the brake valve, one of which is con-

Fig. 17—Duplex Air Gage

stantly in communication with main reservoir pressure (red hand), while the other is in constant communication with equalizing reservoir pressure (black hand).

FEED VALVE

The Single Pressure Feed Valve, Type C-6, is bolted to the brake valve as shown in Fig. 13, in section in Figs.

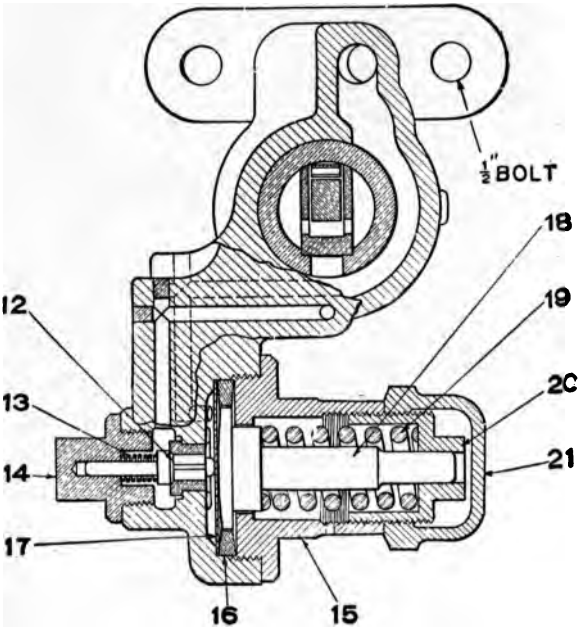

Fig. 18—C-6 Feed Valve, Actual Section Through Spring Box

18 and 19, and diagrammatically in Figs. 20 and 21. This device consists of the following parts: 2, Valve Body; 4, Flush Nut; 5, Cap Nut; 6, Piston; 7, Supply Valve; 8, Supply Valve Spring; 9, Piston Spring; 10, Piston Spring Tip; 12, Regulating Valve; 13, Regulating Valve Spring; 14, Regulating Valve Cap Nut; 15, Spring Box; 16, Diaphragm Ring; 17, Diaphragm; 18, Diaphragm Spindle; 19, Regulating Spring; 20, Regulating Nut; 21, Check Nut.

It is of the slide valve type, consisting of two portions, the supply and regulating portions. The supply portion consists of a slide valve 7, and a piston 6, Fig. 20. The slide valve 7 opens or closes communication from the main reservoir to the brake pipe and is moved by the piston 6 which is operated by main reservoir air entering through passage *a* on one side or by the pressure of the piston spring 9 on its opposite side. The regulating portion consists of a brass diaphragm 17, on one side of which there is the diaphragm spindle 18, held against the diaphragm by the regulating spring 19, and on the other side a regulating valve 12, held against the diaphragm or its seat, as the case may be, by spring 13. Chamber L, on the face of the diaphragm, is open to the brake pipe through passage *e* and *d*. The reed valve is adjusted by screwing regulating nut 20 in or out, thus increasing or decreasing the pressure exerted by the spring on the diaphragm.

Suppose spring 19 to be compressed so as to exert a force equivalent to a 70 lb. air pressure on the opposite side of the diaphragm. Then, as long as the air pres-

sure in the brake pipe and chamber L is less than 70 lbs., the spring holds the diaphragm over as far to the left as possible, as shown in Fig. 21. This holds the

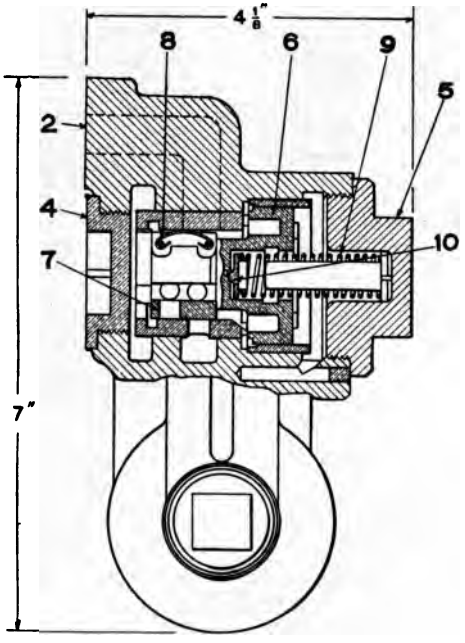

Fig. 19—C-6 Feed Valve, Actual Section Through Slide Valve

regulating valve 12 off its seat, thus opening port K which permits air to flow through port K and from passage H to chamber G at the back of supply piston 6. Consequently, as long as the air pressure in G, *h*, *e* and *d* is

less than 70 lbs., the higher main reservoir pressure on the opposite side of piston 6 forces it to the extreme left, compressing spring 9 and opening port *c*, as shown in Fig. 21. Air, therefore, continues to flow from the main reservoir through *a*, *c* and *d* to the brake pipe, increasing its pressure and the pressure in chamber L,

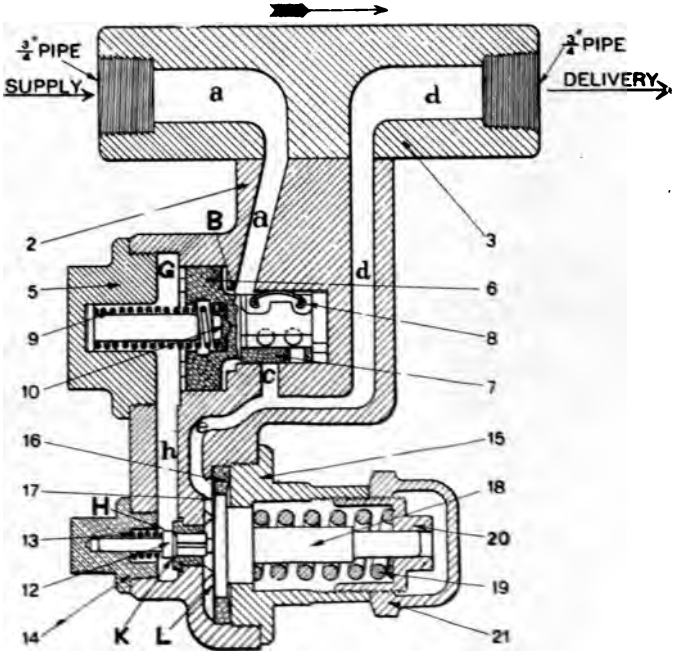

Fig. 20—C-6 Feed Valve (Diagrammatic), Closed

acting on diaphragm 17, until it reaches 70 lbs. The air pressure on the diaphragm is then able to overcome the

spring pressure on the opposite side and force the diaphragm to the right by "buckling" it slightly in that direction. This allows the regulating valve spring 13 to return the regulating valve 12 to its seat, which closes port K. Chambers G and H are then no longer open to the brake pipe passage *d* at 70 lbs. pressure, and being

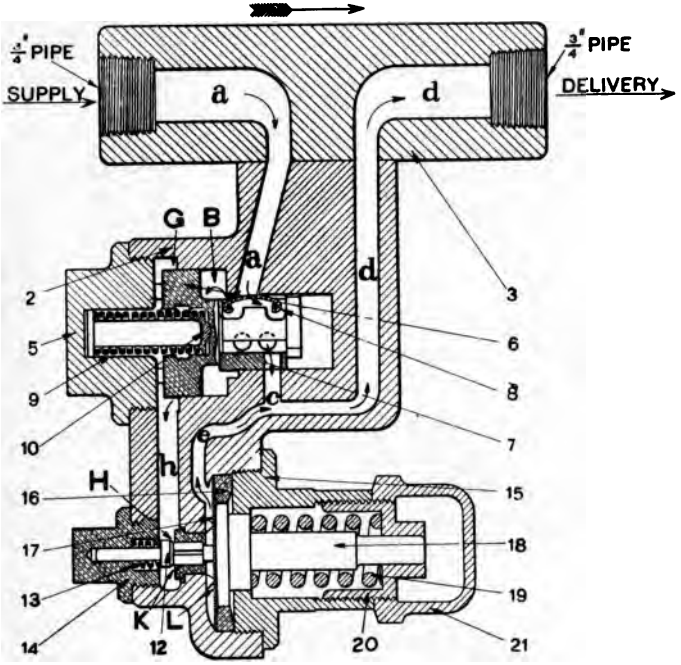

Fig. 21—C-6 Feed Valve (Diagrammatic), Open

small, are instantly raised to main reservoir pressure by the slight leakage of air past the supply piston which

is made loose fitting for this purpose. As the air pressures become nearly equal on the opposite sides of the supply piston, the piston spring 9 forces the piston and its slide valve to closed position, Fig. 20, which prevents further flow of air from the main reservoir to the brake pipe. The operation of the valve as described, after the pressure in the brake pipe has reached 70 lbs., is almost instantaneous so that the brake pipe pressure is held constant at 70 lbs. until it is slightly reduced by leakage so that its pressure on diaphragm 17 is no longer able to withstand the pressure of the regulating spring, which then forces the diaphragm back, lifting the regulating valve from its seat and again opening port K. This allows the air (at main reservoir pressure) in chambers G and H to flow through K to chamber L, thus dropping the pressure behind piston 6 below that of the main reservoir acting on the opposite side of the piston. The higher pressure then forces the piston over into open position, as shown in Fig. 21, and allows sufficient air to flow through port *c* to the brake pipe to again raise its pressure to 70 lbs., when the feed valve closes.

The feed valve acts as a maintaining valve in this manner, keeping the brake pipe pressure constant at the amount for which the regulating valve is adjusted, so long as the brake valve handle is in *Running* position, as shown in Fig. 37.

PLAIN TRIPLE VALVE

The Plain Triple Valve, Fig. 4, has a cast-iron body with pipe connections to the brake pipe, BP; to the auxiliary reservoir, R; to the brake cylinder, C; and an out-

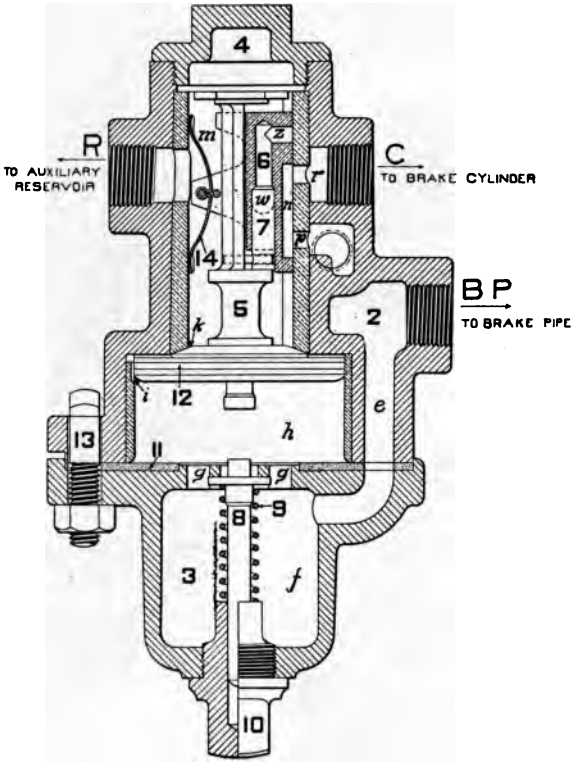

Fig. 22—Plain Triple Valve

let to the atmosphere shown by the full and dotted circles to the right of *p*, Fig. 22. This device consists of the following parts: 2, Body; 3, Cylinder Cap; 4, Cap Nut; 5, Piston; 6, Slide Valve; 7, Graduating Valve; 8, Graduating Stem; 9, Graduating Spring; 10, Graduating Stem Nut; 11, Cylinder Cap Gasket; 12, Piston Ring; 13, Bolt and Nut; 14, Slide Valve Spring.

The operating parts consist of a slide valve, 6, in which the graduating valve 7 moves, the piston 5 and the graduating stem 8, with its spring 9. The graduating valve is attached to the stem of piston 5 by a pin as shown by dotted lines in Fig. 22.

It will be observed that the triple valve piston forms a movable partition between the chamber *m*, above the slide valve, which is connected to the auxiliary reservoir, and chamber *h*, which is connected to the brake pipe. In release position, Figs. 22 and 40, communication from chamber *h* to chamber *m* and the auxiliary reservoir is open through the feed grooves *i* in the piston bushing and *k* in the piston seal, and the air pressure is the same on both sides of the piston. As long as the pressure remains the same on both sides of the piston it cannot move, but when the condition is changed so that there is a greater pressure on one side than on the other, the piston tends to move away from the higher toward the lower pressure. It is of the utmost importance that this principle be thoroughly understood, for it is the principle upon which practically all the automatic devices of the air brake operate. *The devices used in connection with the air brake, which are automatic in their action,*

depend, for their operation, upon the movements of one or more diaphragms or pistons. The piston or diaphragm is a movable partition, separating two sources of pressure. As long as these pressures are equal, no movement occurs, but as soon as the equality of pressure is destroyed and the pressure on one side becomes higher than that on the other, the piston or diaphragm tends to move toward the lower pressure, and as soon as the balance of pressure is again restored the tendency to move ceases. This holds true whether the pressures involved are due to compressed air, springs, or a combination of the two.

In the case of the triple valve, the variations in pressure necessary to cause it to operate are due to the increase or decrease in brake pipe pressure caused by a movement of the brake valve, opening of a conductor's valve, burst hose or piping, leakage, etc., or due to a decrease in auxiliary reservoir pressure caused by the flow of air from the auxiliary reservoir to the brake cylinder during an application of the brakes. The operation of the triple valve is explained in detail in connection with the operation of the equipment as a whole (see page 62).

If an engine truck brake is used, its auxiliary reservoir is connected into a pipe leading from the driver brake auxiliary reservoir to the triple valve and a branch from the brake cylinder pipe connected to the truck brake cylinder. A cut-out cock is located in the branch pipe leading from the brake pipe to the triple valve, which enables the locomotive brake to be cut out when necessary. A cut-out cock is also located in the truck brake

cylinder pipe to permit the truck brake to be cut out in case of necessity. If thought desirable, a cut-out cock may be located in the driver brake auxiliary reservoir pipe and the pipe from the truck brake auxiliary reservoir, for the purpose of cutting out the respective reservoirs, or a cut-out cock is sometimes used in the driver brake auxiliary reservoir pipe only, but we do not recommend the use of either one of these cocks or furnish them with the complete locomotive equipments except when specially ordered.

QUICK-ACTION TRIPLE VALVE

The Quick-Action Triple Valve is similar to the plain triple valve in principle, but has in addition the quick-action parts, consisting of an emergency piston 8, emergency valve 10, and check valve 15, Fig. 23. Besides these additional parts, the valve is arranged so as to be bolted to the pressure head of the brake cylinder in passenger equipments, Fig. 6, or to the cast-iron auxiliary reservoir in freight equipments, Figs. 2 and 7, thus making only one pipe connection necessary, viz., that from the brake pipe branch pipe. A strainer, 16, is provided at the branch pipe union connection to prevent the entrance of foreign matter to the valve. This device consists of the following parts: 2, Body; 3, Slide Valve; 4, Main Piston; 5, Main Piston Ring; 6, Slide Valve Spring; 7, Graduating Valve; 8, Emergency Piston; 9, Emergency Valve Seat; 10, Emergency Valve; 11, Rubber Seat; 12, Check Valve Spring; 13, Check Valve Case; 14, Check Valve Case Gasket; 15, Check Valve; 16, Strainer; 17,

Union Nut; 18, Union Swivel; 19, Cylinder Cap; 20, Graduating Stem Nut; 21, Graduating Stem; 22, Graduating Spring; 23, Cylinder Cap Gasket; 24, Bolt and Nut; 25, Cap Screw; 26, Pipe Plug; 27, Union Gasket; 28, Emergency Valve Nut.

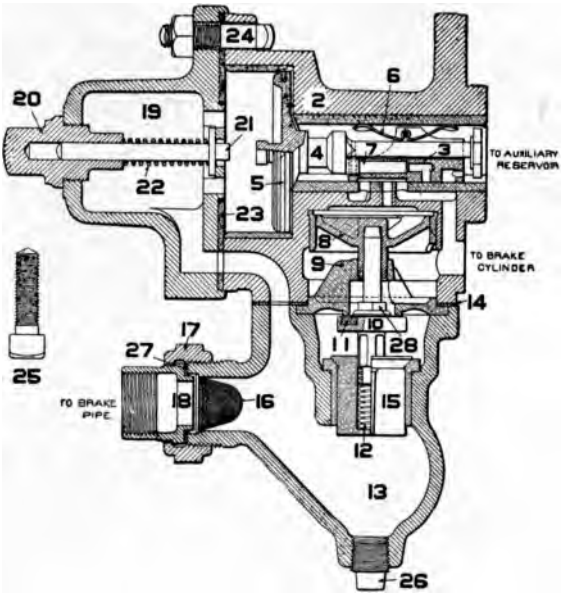

Fig. 23—Quick-Action Triple Valve

To further protect the triple valve from dirt which may be carried through the brake pipe a Brake Pipe Air Strainer is located in the brake pipe at the point where the branch pipe is taken off, Figs. 1 and 2. However, it is now our standard practice to furnish the Centrifugal

Dirt Collector in place of the brake pipe air strainer. This device is so constructed, Fig. 24, that by the combined action of centrifugal force and gravity, all dirt and foreign matter is automatically eliminated from the air flowing through the collector and falls into the bottom chamber from which it may be conveniently removed, by means of a plug, without breaking any pipe connec-

Fig. 24—Centrifugal Dirt Collector

tions whatever. A strainer will clog in time, but the design of the collector is such that it performs its function without reducing the normal area of the opening through the device for the passage of air.

In the branch pipe between the brake pipe and triple valve, when the brake pipe strainer is used, or between the brake pipe and centrifugal dirt collector, when the latter is used, is a cut-out cock, which, when closed, cuts off communication between the brake pipe and the triple

valve. By closing this cock, therefore, the brake on any individual car may be "cut out," without interfering with the operation of the rest of the brakes in the train, *except as it affects the obtaining of an emergency application of the brakes throughout the train.* This should be noted particularly, for when any triple valve is cut out in this manner, the additional car length of pipe between the triple valves on either side of one cut-out may, in combination with other existing conditions, be sufficient to prevent the obtaining of a quick-action application throughout the train. Small leaks are not sufficient excuse for cutting out brakes.

AUXILIARY RESERVOIR

As already stated, the compressed air necessary for the operation of the brake on each vehicle is stored in the Auxiliary Reservoir. The size of the auxiliary reservoir differs for different sizes of brake cylinders, but its volume should always be such that when using 70 lbs. brake pipe pressure and 8-inch piston travel, the maximum brake cylinder pressure obtainable with a service application is 50 lbs.

For passenger car equipments the reservoir is usually of wrought iron with pipe connections leading to the triple valve seat on the brake cylinder head, Fig. 1. For freight car equipments a cast-iron auxiliary reservoir is used, having a seat on one end for the triple valve and arranged on the other end for direct connection with the brake cylinder, Fig. 2, with a tube inside the reservoir to connect the triple valve to the brake cylinder. It

is not always convenient to use this combined equipment on account of the limited space, so that the cylinder and reservoir are also furnished detached when desired, a pipe being used to connect the outlet of the reservoir tube and the brake cylinder.

The reservoir used on passenger cars is provided with a drain cock for the purpose of draining off water which may collect therein. Individual brakes can be released by hand, if necessary, by opening the drain cock and allowing enough air to escape from the auxiliary reservoir to reduce its pressure slightly below that in the brake pipe. When releasing a brake in this way the drain cock should be closed as soon as air is heard to exhaust from the triple valve.

The freight auxiliary reservoir is provided with a plug on its lower side for drainage and with a release valve located on the upper side of the reservoir, having rods extended from the arms of the valve to each side of the car. By pulling the rod the release valve may be opened and air discharged from the reservoir to release the brake. As soon as the rod is released, the release valve is closed automatically.

BRAKE CYLINDER

The passenger car brake cylinder, one type of which is shown in Fig. 25, contains a piston 3, having a packing leather 9, the piston rod being fastened rigidly to the piston. This device consists of the following parts: 2, Body; 3, Piston and Rod; 4, Non-Pressure Head; 5, Pressure Head; 6, Crosshead; 7, Gasket; 8, Follower; 9,

Packing Leather; 10, Packing Expander; 11, Stud and Nut; 12, Release Spring.

To apply the brake, compressed air is admitted between the piston and the pressure head 5. On the opposite side of the piston is the release spring 12, which tends to return and hold the piston and its attached levers and rods in release position, Fig. 26, when the air pressure in the cylinder is less than the force of the spring.

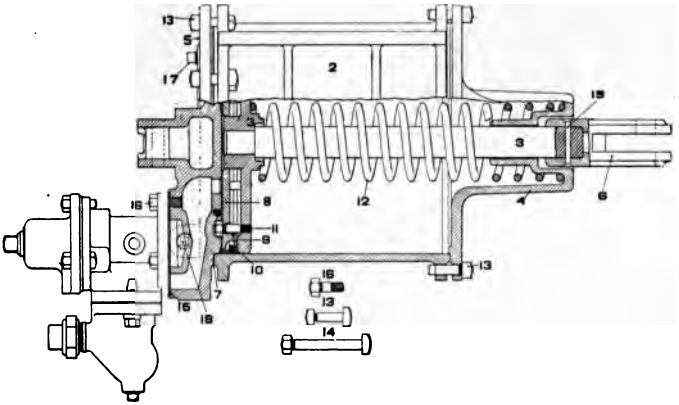

Fig. 25—Passenger Brake Cylinder

The freight car brake cylinder is similar to that on a passenger car except that the auxiliary reservoir, in the combined equipment, forms the pressure head, and the piston rod is a hollow sleeve in which is a loose push rod attached to the levers and rods of the foundation brake gear. This permits the brake to be set by hand without compressing the release spring, while the arrangement of the truck permits the brake shoes to be hung so

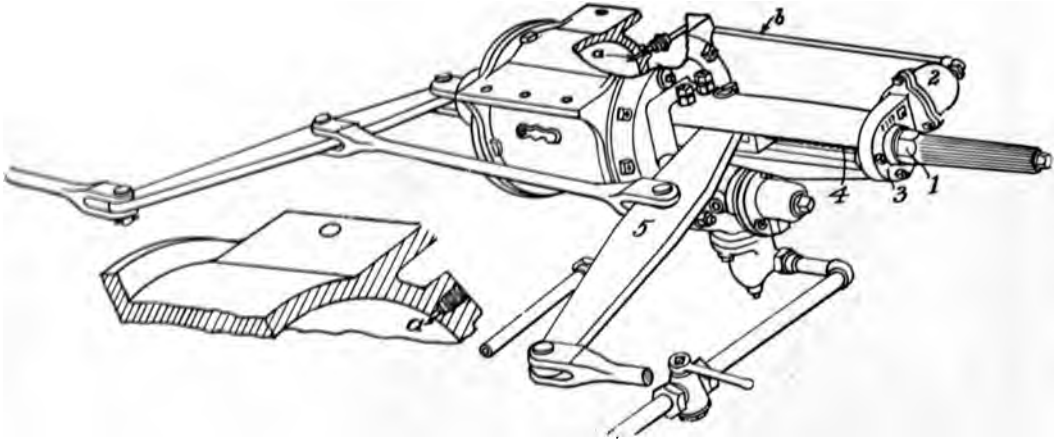

Fig. 26—Passenger Brake Cylinder with Automatic Slack Adjuster Showing Lever Connections

that they fall away from the wheels by gravity and return the push rod when a release is made without requiring the assistance of a release spring.

On the pressure head is a seat for the triple valve, a pipe connection leading to the auxiliary reservoir and lugs to which the American Automatic Slack Adjuster is bolted, as shown in Fig. 26.

There is a small groove, called the *Leakage Groove,* in the wall of the brake cylinder, which makes a connection from one side of the piston to the other when the brake is released. This groove around the piston is not shown in Fig. 25, but is illustrated in the diagrammatics, Figs. 37 to 41.

When running over the road it may occasionally happen that the brake pipe leakage and other conditions combine to make a slight difference of pressure which will gradually move some individual triple piston so as to close its feed groove and the exhaust port and open the service port very slightly. Air will then begin to flow to the brake cylinder and would finally cause the brakes to "creep on" and "drag" if it were not for the leakage groove which is of ample size to permit the air reaching the brake cylinder from such causes to flow past the piston to the atmosphere.

Piston Travel

The distance the piston is forced outward in applying the brakes on a car when in motion is always greater than when the car is not in motion, due to the slack in loose-fitting brasses, to the shoes pulling down on the wheels,

to play between the boxes and pedestals, and so on. To secure the standard running travel of 8 inches, therefore, the standing travel should be adjusted to as near 6 inches as possible. This is important, for if the running piston travel is too short, a high braking power will be obtained when only a low braking power is desired, the equalizing of auxiliary reservoir and brake cylinder pressures will occur sooner, will be much higher, and the time in which the engineer can perform the operation is greatly reduced. On the other hand, if the piston travel is too long, the proper braking power is not obtained for a given reduction and the final "equalization" pressure is lowered.

Piston travel should never be altered to obtain sufficient shoe clearance. This should be obtained by using a brake cylinder of proper size for the braking force to be developed and through proper proportioning of the foundation brake gear. When inserting new shoes to replace those worn out, the brake slack should be let out first and piston travel adjusted properly after new shoes are in place.

CONDUCTOR'S VALVE

On passenger cars the brake pipe has a branch leading to the Conductor's Valve, the handle of which is inside the car, conveniently located so that, in case of necessity, it can be easily reached. A cord attached to the handle and running the length of the car is often used to permit of opening the valve with the

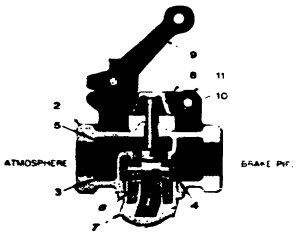

NOTE:—The B-3-A Conductor's Valve, illustrated at the left, now supersedes the C-3 Type.

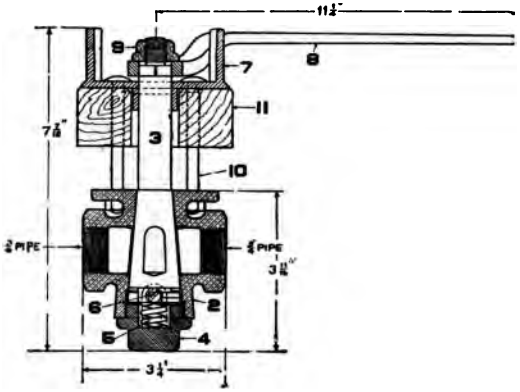

Fig. 27—Type C-3 Conductor's Valve

least possible delay. The valve most commonly used is the Type C-3*, Fig. 27. It is of the plug cock, non-self-closing type and when opened permits air from the brake pipe to escape freely to the atmosphere, causing a quick-action application of the brakes.

After making a stop of this kind, the conductor's valve must be closed before the brake pipe and system can be recharged and the brakes released. This device consists of the following parts: 2, Body; 3, Key; 4, Cap; 5, Key Spring; 6, Key Stop; 7, Key Escutcheon; 8, Handle; 9, Key Nut; 10, Bolt and Nut; 11, Filler Block.

PRESSURE RETAINING VALVE

The Pressure Retaining Valve is furnished with all freight car brake equipments, but is included with passenger car equipments only when specially ordered. The retaining valve is usually fastened on the end of the car by lag screws, and is connected to the triple valve exhaust port by the retaining valve pipe. This device consists of

*NOTE:—See note on page 50.

the following parts: 2, Body; 3, Case; 4, Weight; 5, Handle; 6, Cock Key; 7, Cock Cap; 8, Key Spring.

The plain or single-pressure weight type retaining valve, Fig. 28, consists of a plug cock 6, connected to the retaining valve pipe at X, and having two outlets, one to

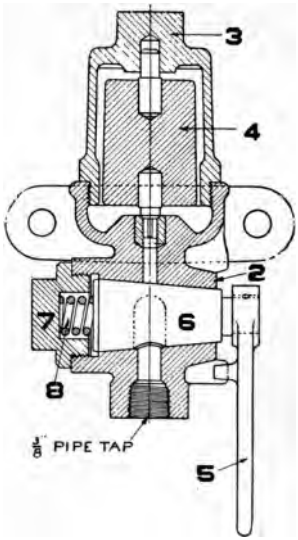

Fig. 28—Single-Pressure Weight Type Retaining Valve, Open

the atmosphere and the other to the retaining valve proper. This latter consists of a weighted valve 4 normally resting on a seat 2 and holding port *b* closed. When the handle 5 of the retaining valve is turned down, the groove *a* in the cock key connects port *b* and the outlet *c* to the atmos-

phere. Consequently, when "turned down" the triple valve exhaust is open through the retaining valve pipe, port *b*, groove *a* and exhaust port *c* to the atmosphere. When the retaining valve handle is "turned up" to the horizontal position, shown in Fig. 29, groove *a* connects

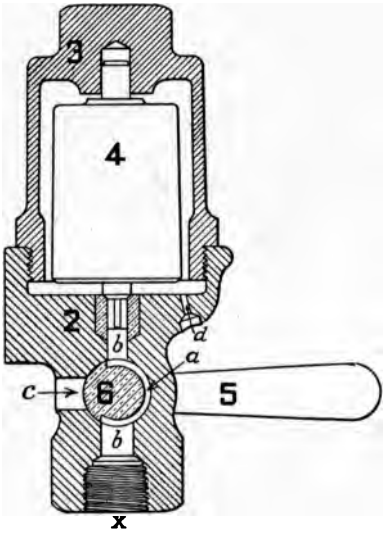

Fig. 29—Single-Pressure Weight Type Retaining Valve, Closed

port *b* below the cock key with port *b* above it, so that when a release is made the air exhausting from the brake cylinder flows to the retaining valve and through port *b*, cavity *a* and upper port *b* to the weighted valve 4, which it must lift in order to flow past valve 4 to the atmos-

phere through the small port *d*. The weight 4 is capable of retaining a pressure of 15 lbs. in the brake cylinder. As long as the pressure of the air from the brake cylinder is greater than this, it holds the valve 4 from its seat and the air exhausts to the atmosphere through port *d*, which, being small, makes the release of the brake much slower than when the retaining valve is not used. When the pressure has been reduced to 15 lbs. it is no longer able to hold the weighted valve 4 off its seat and the valve then closes and the remaining 15 lbs. is retained in the brake cylinder until the handle 5 is turned down. When used on vestibuled passenger cars the valve is provided with an extension handle to permit of its being conveniently operated from the platform.

High and Low Pressure Retaining Valve

Under extreme conditions of heavily loaded trains on grades it is often necessary to provide for retaining more than 15 lbs. in the brake cylinder. The High and Low Pressure Retaining Valve, Fig. 30, is used for this purpose. This is similar to the valve just described except that a cylindrical weight 10, surrounding the usual weighted valve 4, is added. When the handle 5 is "turned down," air from the brake cylinder passes freely to the atmosphere, as explained, and a lug on handle 5 raises the lifting pin 9 and the outer weight 10 so that the smaller weight 4 alone rests on the valve seat and the wear is reduced to a minimum. When the handle is "turned up" to a horizontal position, as in the case of *the plain* or single-pressure retaining valve, another lug

on the handle raises lifting pin 9 and the outer weight 10 so that the smaller weight 4 alone acts to retain 15 lbs. pressure in the brake cylinder in the manner already described.

When it is desired to retain a higher pressure in the

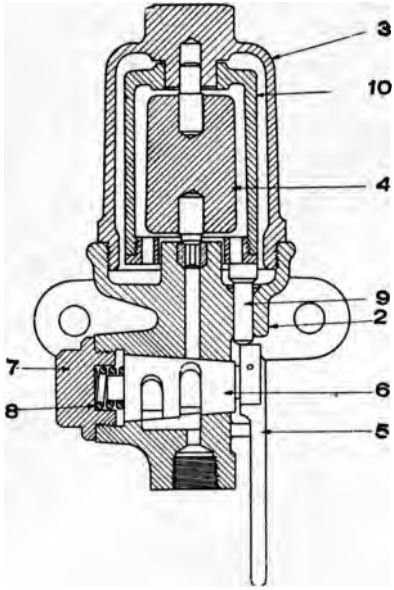

Fig. 30—High and Low Pressure Weight Type Retaining Valve, Section

brake cylinder the handle is placed in the intermediate position marked "High Pressure," Fig. 31. This permits the lifting pin 9 to drop away from the outer weight

10, Fig. 30, which then rests on the inner weight 4 and the air pressure must then lift both weights, the combined weight of which is capable of retaining 30 lbs. in the brake cylinder, before it can escape to the atmosphere. Conditions in some sections of the country require relatively lower pressures to be retained in the brake cylinder for which purpose a retainer is furnished for 10 lbs. in "low" and 20 lbs. in "high" position.

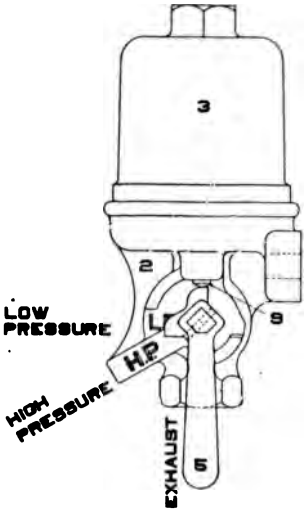

Fig. 31—High and Low Pressure Weight Type Retaining Valve, Showing Three Positions

For more severe conditions than these, weights are made larger, so as to retain 25 lbs. in "low" and 50 lbs. in "*high*" position.

NOTE:—While the Weight Type Pressure Retaining Valve is regularly furnished with Freight Brake Equipments, the Spring Type, illustrated below, is in use on some roads. Among other improved features, this type includes a spring instead of a weight for retaining the pressure in the brake cylinder, and an opening tapped for gage connection whereby brake cylinder leakage may be readily tested without the necessity of disconnecting the retainer pipe at the triple valve.

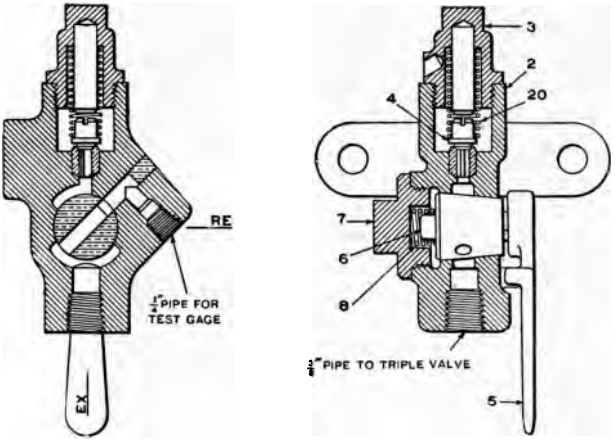

Sectional Views Single Pressure Spring Type Retaining Valve

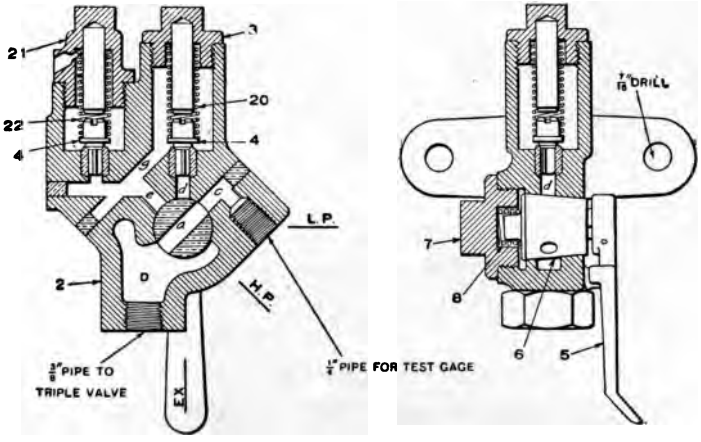

Sectional Views Double Pressure Spring Type Retaining Valve

Failure of the pressure retaining valve to hold air in the brake cylinder is generally due to a leak in the connecting pipe, a frequent seat of trouble being at the union; it may also be due to a leak in the brake cylinder or in the retaining valve, but seldom in the latter.

The retaining valve should stand vertically; there should be no obstruction to the removal of the cap; it should be so located as to be freely accessible when the train is in motion. It should be cleaned, but not oiled, every time the remainder of the air brake equipment receives that attention; both it and the connecting pipe should be well secured; a good rubber gasket should be used in the union, and a little flexibility should be provided in the pipe leading to it from the triple valve.

BRAKE PIPE FITTINGS

As stated and illustrated in Figs. 1 and 2, the brake pipe is connected between cars by flexible Hose and

Fig. 32—Hose and Coupling

Couplings, in order to permit the cars to move relatively to one another the amount determined by the slack and yielding of the draft rigging without bringing any strain on the brake pipe. When uncoupling, the hose should always be parted by hand, for if left coupled to be pulled apart by the separation of the cars, damage to the hose

or piping is sure to result. After uncoupling, the hose should always be attached to the Dummy Couplings; Fig. 33, to keep the hose from being injured by swinging and prevent cinders or other foreign matter from getting into the brake pipe.

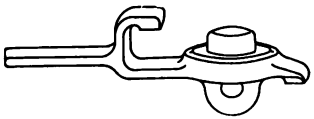

Fig. 33—Dummy Coupling

The brake pipe is provided with an Angle Cock at each end of the car. At the pilot end of the locomotive an ordinary Cut-Out Cock is usually used instead of an angle cock.

It is of the greatest importance that all angle cocks *between* vehicles should be *open*, for if an angle cock in the train is closed, it is impossible to operate the brakes on the cars back of the closed cock. Only the angle cock at the rear of the last car and the cut-out cock in the brake pipe on the engine pilot should be closed. Fig. 1 shows the old style angle cock with plain handle, while Fig. 2 shows the new standard angle cock with self-locking handle, which locks the handle in both open and closed positions. When so locked, it is necessary to slightly raise the handle before it can be turned, thus insuring protection against accidental opening or closing by being stepped upon, flying missiles or loose rods and chains. The self-locking type is the same as the old

style angle cock in all details except the handle, the two types of handles being shown in Fig. 34; the upper photograph illustrates the self-locking style and the lower, the plain form.

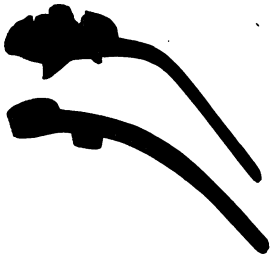

Fig. 34—Plain and Self-Locking Angle Cock Handles

As a rule, the engine and tender are permanently connected, for which reason Angle Fittings are ordinarily used instead of angle cocks in the brake pipe connections between the engine and tender (see Figs. 1, 2 and 35).

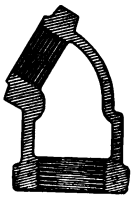

***Fig.* 35—Angle Fitting**

The Tender Drain Cup, formerly used, Fig. 36, was located at the point where the tender branch pipe joins the brake pipe and served to entrap moisture which would otherwise be carried back into the brake pipe and valves on the cars.

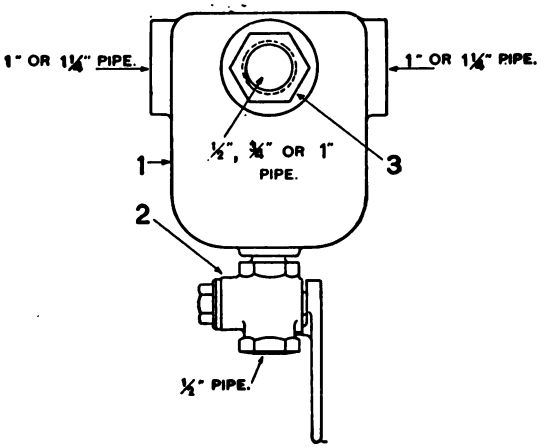

Fig. 36—Tender Drain Cup

A Drain Cock at the bottom of the tender drain cup permits of easily draining off the water or other foreign matter thus collected.

OPERATION OF THE EQUIPMENT

Running

In describing the operation of the equipment it will be noted that the apparatus as shown on the folders, Figs. 1 and 2, is treated as a whole and the operation of each part or device is explained with regard to its relation to the other parts of the equipment.

When running over the road the brakes are kept released by the brake cylinders being open to the atmosphere through their respective triple valve exhaust ports and the system is kept recharged by air from the main reservoirs passing through the brake valve and feed valve, which reduces its pressure to that to be carried in the brake pipe, through which it reaches the triple valve on each car and passes through the triple valve feed groove to the auxiliary reservoir, which is thus charged to the brake pipe pressure carried.

In charging the system, compressed air flows from the main reservoirs to the brake valve, entering it through passage A, Fig. 37, and flowing to chamber A above the rotary valve (represented by space A at center of rotary valve, Fig. 14). Port *j* through the rotary valve registers with port *f* in the seat, allowing air to flow to the feed valve, which is attached directly to the brake valve as shown. The feed valve reduces the pressure of the air from that carried in the main reservoir to that which is to be carried in the brake pipe. From the feed valve the air re-enters the brake valve through port *i* which has two branches.

One branch leads to port *l* in the seat (*direct application and supply port*) through which air flows to the cavity *c* in the rotary valve, thence to the equalizing port *g* in the seat and through this to the chamber D above the equalizing piston in the lower part of the brake valve. Chamber D is connected through port *s* and pipe connections as shown to the equalizing reservoir. The purpose of the equalizing piston and reservoir will be described later, page 68. A branch from the equalizing reservoir pipe leads to the black hand of the duplex air gage which therefore really registers the pressure in chamber D and the equalizing reservoir. However, as will be seen from what follows, this bears such a relation to the brake pipe pressure that the black hand of the gage is usually considered to show brake pipe as well as equalizing reservoir pressure.

The other branch of port *i* leads from the feed valve to the brake pipe connection at Y and to the underside of the equalizing piston. Therefore, with the brake valve handle in *Running* position, the feed valve maintains a practically constant pressure (70 lbs. being the usual pressure for which the feed valve is adjusted) in the brake pipe and on the under side of the equalizing piston and the same pressure in the equalizing reservoir and chamber D on the upper side of the piston.

The end of the equalizing piston stem is called the "equalizing discharge valve," which, when open, allows air from the brake pipe to flow through port *m*, past the equalizing discharge valve and through port *n* to the service exhaust fitting and atmosphere at EX. This valve is

held to its seat during the time the brake pipe is being charged as above, as well as at all times when the air pressure (in pounds per square inch) is the same on the under and upper sides of the piston, because the pressure of the air above the piston acts on the entire area of the piston, while that below it acts on an area which is less than that above by the amount of the cross-sectioned area of the piston stem. This makes the total pressure on the top of the piston slightly higher than that below, thus holding the piston down and the equalizing discharge valve on its seat.

Air entering the brake pipe at Y flows through this pipe the entire length of the train, and through the branch pipe to the triple valve on each vehicle. Passing through the branch pipe and branch pipe cut-out cock on the engine, air enters the plain triple valve through port *e* to chamber *f* and through passages *g* to chamber *h*, in which the triple valve piston 5 moves. The air pressure in chamber *h*, acting on the face of the piston, forces it to its extreme position to the right, which is *Release and Charging* position. In this position air can flow from chamber *h* around the piston through feed groove *i* in the bushing and *k* in the piston seat into chamber *m* and thence, through the pipe connection at R, as shown, to the auxiliary reservoir. During the time the brake valve handle remains in *Running* position, air continues to flow from the feed valve through the brake valve, brake pipe, and triple valve to the auxiliary reservoir in this way until the system is charged up to the pressure at which the feed valve is adjusted to close, after which any leakage

from the system, which reduces the pressure slightly, will cause the feed valve to open again and supply air to the system. As a very slight drop in brake pipe pressure will cause the feed valve to open, it will be seen that the brake pipe and auxiliary reservoirs are maintained at a practically constant pressure as long as the brake valve handle remains in running position and the feed valve is operating properly.

From Fig. 23 it will be seen that the triple valve piston 5 has a stem on which are two collars. Between these two collars is a slide valve 6, shorter than the distance between the collars on the piston stem, so that there is a certain amount of clearance or "lost motion" between the piston stem and the slide valve. The function of this slide valve 6 is to make proper connections between the space *m* (auxiliary reservoir pressure) and the brake cylinder port *r* in the seat of the valve, or between the brake cylinder port *r* and the exhaust port *p*, also in the seat, or to close these ports, according to the positions to which the slide valve is moved by the triple valve piston, as described later. In the *Release* position shown, Figs. 22, 23 and 40, air at auxiliary reservoir pressure is acting above and on all sides of the slide valve, but cannot flow past or through it, since all ports through the valve are closed. The exhaust cavity *n* in the face of the valve, however, makes an opening across from the brake cylinder port *r* in the seat to the exhaust port *p*, so that the brake cylinder is then connected through the pipe connection to the triple valve and the ports

named to the exhaust opening and atmosphere. Any compressed air contained therein will then flow to the atmosphere, thus permitting the release spring acting on the opposite side of the piston to force it back to release position and release the brake shoes from the wheels.

The air from the brake pipe flowing through the branch pipe and cut-out cock on the tender and cars enters the quick-action triple valve, through chamber *a* in the lower case and port *e*. The passage of air through this triple valve to the auxiliary reservoir is then the same as described on page 64 for the plain triple valve, the ports, cavities, etc., being lettered the same. The parts in the lower portion of the quick-action triple valve are practically additions to the upper portion (which is, in effect, a plain triple valve), their function being to vent brake pipe air directly into the brake cylinder, thus producing a quick-action or "emergency" application, as described on page 75. As they do not act, however, except when an emergency application takes place, they need not be referred to further here.

The condition just described, viz., the brake valve handle in *Running* position, the triple valve pistons and slide valve in *Release* position, and the brakes released, and the auxiliary reservoirs charged and maintained at the pressure for which the feed valve is adjusted ("standard brake pipe pressure"), is the normal condition of the brake system when the train is running over the road and the brakes are not being used.

Service Application

To apply the brakes in service the brake valve handle is moved to a position which allows air to escape from the brake pipe to the atmosphere. This reduces the pressure on the brake pipe side of each triple valve piston in the train below that in the auxiliary reservoir, acting on the opposite side of the piston, which differential causes the triple valve piston and slide valve to move to *Service* position. This opens the service port through the triple valve, which permits air to flow from the auxiliary reservoir to the brake cylinder and apply the brake, as has been explained.

The system being charged as has been described, say to 70 lbs. brake pipe pressure, when it is desired to make an ordinary "service" stop, the brakes are applied by placing the brake valve handle in *Service Application* position, Fig. 38. This cuts off all air supply to the brake pipe or equalizing reservoir and opens the small port *e,* called the *preliminary exhaust port,* leading to chamber D and the equalizing reservoir. This permits air to escape from above the equalizing piston through port *e* in the rotary valve seat, cavity *p* in the rotary valve and the *direct application and exhaust port, k,* to the atmosphere. This at once reduces the pressure of the air on the top of the equalizing piston below that in the brake pipe under the piston, and the higher pressure forces the piston upward, raising the attached equalizing discharge valve from its seat and allowing air from the brake pipe to flow through opening *m,* past the valve, and through passage *n* and the service exhaust fitting to the atmos-

phere. For illustration, suppose that only a moderate application of the brakes is desired, requiring, say a 10-lb. reduction in brake pipe pressure. The brake valve handle is left in *Service Application* position until the black hand of the duplex air gage shows that a 10-lb. reduction has been made, by dropping from 70 to 60 lbs., and is then returned to *Lap* position. This closes the preliminary exhaust port *e*, preventing further reduction, and the other ports through the rotary valve and seat also remain closed, Fig. 39. It will be noted that the gage connection leads out from the equalizing reservoir pipe, so that a 10-lb. reduction observed was that made in the equalizing reservoir and chamber D, above the equalizing reservoir, the pressure in which now stands at 60 lbs. It will now be clear that the *purpose of the equalizing reservoir* is to add volume to the chamber D above the equalizing piston. Without the equalizing reservoir this volume is so small that, with the brake valve handle in *Service* position, its pressure would drop to zero almost instantly and it would consequently be very difficult to make a moderate brake pipe reduction and practically impossible to obtain the exact amount of reduction desired in any given case. But with the volume of chamber D increased by that of the equalizing reservoir, sufficient capacity is obtained so that with the brake valve handle in *Service* position it takes from 9 to 10 seconds for the pressure above the equalizing piston to drop from 70 lbs. to 50 lbs., which is slow enough to permit the reduction to be stopped at any desired point, as indicated by the air gage.

While the pressure in chamber D is being reduced from 70 lbs. to 60 lbs. and the brake valve handle placed in *Lap* position, holding the pressure of 60 lbs. constant above the equalizing piston as explained, the brake pipe pressure is falling also, due to air escaping through the service exhaust fitting to the atmosphere, as also described. Whether this flow of air from the brake pipe ceases at once or continues for a period of time after the handle is placed in *Lap* position depends upon whether the train is a long or short one. With a short train the total volume of air in the brake pipe is not very great, so that it can escape through the service exhaust nearly as fast as the air in chamber D and the equalizing reservoir is flowing out through the preliminary exhaust port *e,* thus the pressure below the equalizing piston is falling at about the same rate as that above.

In such a case, as soon as the pressure in chamber D ceases to fall, the brake pipe pressure below the equalizing piston becomes slightly less than that above the piston and the higher pressure forces the piston downward, seating the equalizing valve and preventing further flow of air from the brake pipe.

On a long train, however, the total volume of air in the brake pipe is large, so that it takes very much longer for sufficient air to escape through the service exhaust fitting to reduce its pressure from 70 lbs. to 60 lbs. and the pressure below the equalizing piston therefore falls at a much lower rate than that above it. In such a case, air continues to escape from the brake pipe after the

handle has been placed in *Lap* position for a period of time, depending upon the length of the train, until the brake pipe pressure has been reduced slightly below that in chamber D, when the equalizing piston is forced downward and the service exhaust opening closed as explained. It will be seen that the equalizing piston and valve automatically measure the amount of air which must be discharged from the brake pipe in order to obtain the desired reduction and govern the rate of its discharge, according to the length of the train, to a degree which would be impossible were the flow of air from the brake pipe to the atmosphere directly controlled by the brake valve handle, as in the case of the old three-way cock, and, by closing slowly as the pressure falls, prevents a surge of air to the head end of the brake pipe which, if the opening were closed quickly, might cause some of the head brakes to release.

The description which follows will apply equally to the operation of the plain and quick-action triple valves, except where special reference is made to one or the other of these valves. As the brake pipe is connected to chamber *h* of each triple valve, a reduction in brake pipe pressure, as described, will lower the pressure on the brake pipe side of the triple valve piston below that of the auxiliary reservoir on the opposite side of the piston. The higher auxiliary reservoir pressure will then cause the piston to move in the direction of the weaker pressure, thereby closing communication between chamber *h* and the auxiliary reservoir through feed groove *i*. Au-

tached to the piston stem is a pin valve 7, called the *graduating valve,* which, when seated, Fig. 40, closes communication between port *w* leading from chamber *m* to the graduating valve seat in the slide valve and the service port *z* leading from the graduating valve seat to the face of the slide valve. The first movement of the triple valve piston also unseats the graduating valve 7 so that the air in chamber *m,* entering port *w,* flows to the service port *z.*

There is a small amount of clearance between the slide valve 6 and the collar or "spider" on the end of the triple valve piston stem so that the first movement of the piston, which closes the feed groove *i* and opens the graduating valve 7, does not move the slide valve, but brings the spider on the stem against the end of the valve. Further movement of the piston then causes the slide valve to move until it has closed communication between brake cylinder port *r* and exhaust port *p* and opened port *r* to the auxiliary reservoir through port *z* and *w,* as shown in Fig. 38. The piston then comes into contact with the graduating stem and the resistance of the graduating spring combined with the reduction in auxilary reservoir pressure then taking place prevents further movement of the parts. The valve is then in *Service* position and air from the auxiliary reservoir flows through the service port to the brake cylinder, forcing its piston outward and applying the brake. While the pressure in the brake cylinder rises, that in the auxiliary reservoir falls and (the brake pipe reduction being

10 lbs.) tends to become lower than that in the brake pipe. As soon, however, as the pressure on the auxiliary reservoir side of the triple valve piston falls slightly below that on the brake pipe side the higher pressure causes the piston to move back toward its former (*release*) position, until the graduating valve is seated, closing communication between ports *w* and *z*. This prevents further flow of air from the auxiliary reservoir, the pressure in which is then practically equal to that in the brake pipe, and at the same time prevents further movement of the triple valve piston toward *Release* position, because the slightly higher pressure on the brake pipe side of the piston, which was able to move the piston and graduating valve alone, is not sufficient to move the slide valve also. The parts are then in *Service Lap* position, Fig. 39, and, assuming that there is no leakage, the brake pipe and auxiliary reservoir pressures will remain balanced and the brake cylinder pressure held constant until the brake pipe pressure is further reduced, in order to apply the brakes harder; or increased, in order to release the brakes.

If a further reduction in brake pipe pressure is made, after the parts are in *Service Lap* position, the reduction of pressure on the brake pipe side of the triple valve piston below that on the auxiliary reservoir side causes the piston and its attached graduating valve to move as described for the first service application of the brakes. The slide valve, however, is already in *Service* position, consequently as soon as the graduating valve is opened,

air from the auxiliary reservoir flows to the brake cylinder and increases the pressure therein, thus increasing the pressure of the brake shoes against the wheels. If the brake pipe reduction is continued indefinitely, the auxiliary reservoir pressure will continue to fall and the brake cylinder pressure rise until they become equal, or "equalize." This occurs at about 50 lbs. cylinder pressure, when carrying 70 lbs. brake pipe pressure.

After the pressures in the auxiliary reservoir and brake cylinder have "equalized" in this manner, air ceases to flow out of the reservoir and into the cylinder, because there is no longer any difference of pressure to cause a flow. Consequently, when the brake pipe pressure is reduced below the "point of equalization," the brake cylinder pressure cannot rise above the "equalizing point," even though the brake pipe may be reduced far below 50 lbs. For this reason, therefore, nothing is gained by reducing the brake pipe pressure below the "equalizing point" as explained above. Moreover, it is a needless waste of air and interferes with the proper release of the brakes.

Holding Brakes Applied

After the brakes have been sufficiently applied the brake valve handle is returned from *Service Application* to *Lap* position, Fig. 39, and, as has already been described, in this position the brake valve prevents air from flowing into or out of the brake pipe, thus holding the brakes applied until a further reduction or a release is made.

Release and Recharge

To release the brakes and recharge the auxiliary reservoirs, air is admitted through the brake valve to the brake pipe. This increases the pressure on the brake pipe side of each triple valve piston above that on the other side, causing the piston and slide valve to move back to *Release* position, which permits the air in the brake cylinder to flow to the atmosphere through the triple valve exhaust port, thus releasing the brakes and from the brake pipe through the feed groove around the triple valve piston to the auxiliary reservoir, which is thus recharged.

When the brakes are released by moving the brake valve handle from *Lap* to *Release* position and then to *Running* position, in *Release* position, Fig. 40, air from the main reservoir flows through port *a* in the rotary valve to cavity *b* in its seat, then through cavity *c* in the rotary valve to port *c* and thence directly into the brake pipe. At the same time air in cavity *c* also flows through the equalizing port *g* to chamber D above the equalizing piston and to the equalizing reservoir. Air from the main reservoir also flows through port *j* in the rotary valve into the preliminary exhaust port *e* and to chamber D. While in this position, air from the main reservoir also flows through the warning port *r* in the rotary valve to the direct application and exhaust port *k* and the atmosphere, with considerable noise. This indicates to the engineer that the handle is in *Release* position and attracts [illegible] handle is left there by mistake.

After the handle has been in *Release* position the proper length of time it is moved to *Running* position, which closes the warning port, stops the direct flow of air from the main reservoir to the brake pipe, chamber D and the equalizing reservoir, and opens the supply of air to these parts through the *feed valve*, in which position the brake pipe, chamber D and the equalizing reservoir are charged up and maintained at the standard pressure to be carried by the feed valve, as fully explained on pages 62 to 63. When the pressure in the brake pipe is increased, it raises the pressure in chamber *h* on the face of the triple valve piston, Fig. 39 (which is in *Service Lap* position), above that in the auxiliary reservoir on the opposite side of the piston, causing it to move back, carrying the graduating valve and slide valve with it, to *Release* position as shown in Fig. 40. This movement opens the brake cylinder to the atmosphere through port *r*, cavity *n* in the slide valve and exhaust port *p*, thus releasing the brake, and opens feed groove *i* around the piston so that the auxiliary reservoir is recharged, as explained on page 64.

Emergency Application

When it is desired to make the shortest possible stop the brake valve handle is placed in *Emergency* position, Fig. 41. This opens the brake pipe directly to the atmosphere through the large port *l*, cavity *c* and port *k*, causing a sudden and rapid drop in brake pipe pressure. In *Emergency* position also, cavity *p* in the rotary valve connects the feed port f and the preliminary exhaust port

e to the exhaust port *k*, thus allowing the air in the feed port, chamber D and the equalizing reservoir to escape to the atmosphere. The reduction in brake pipe pressure thus caused takes place so much more rapidly than during a service application of the brakes that the pressure in chamber *h*, on the brake pipe side of the triple valve piston is reduced at a much more rapid rate than can that in the auxiliary reservoir on the opposite side of the piston. The difference of pressure thus obtained is sufficient to cause the piston to move over to *Emergency* position, Fig. 41, compressing the graduating spring.

Up to this point, all statements made regarding the operation of the triple valve have applied equally to the plain or quick-action triple valve, but during an *Emergency* application their action is different.

When the piston and slide valve of the *plain triple valve* move to *Emergency* position, Fig. 41, the brake cylinder port *r* is uncovered, and air from the auxiliary reservoir flows past the end of the slide valve directly through port *r* into the brake cylinder until the brake cylinder and auxiliary reservoir pressures become "equalized." The pressure obtained in the brake cylinder is no higher than when a full service application is made, but the maximum pressure is obtained more quickly.

When the piston and slide valve of the *quick-action triple valve* move to *Emergency* position, Fig. 41, port *s* in the slide valve registers with port *r* in the seat, allowing air to flow from the auxiliary reservoir to the brake cylinder. Port *s* is small, however, and in this position

the slide valve also opens port *t* in its seat, allowing air to flow from chamber *m* through port *t* to the chamber above the emergency piston 8. The other side of the emergency piston 8 is connected to the brake cylinder, in which there is no air pressure, consequently the emergency piston is forced downward, pushing the emergency valve 10 from its seat and allowing the air in chamber Y above the check valve 15 to flow past the emergency valve 10 to chamber X and the brake cylinder. Brake pipe air in *a*, below the check valve 15, then raises the check valve against the resistance of its spring 12 and also flows to the brake cylinder through the passages mentioned. During an emergency application, therefore, the quick-action triple valve supplies air to the brake cylinder from the brake pipe as well as from the auxiliary reservoir. Port *s* is small, so as to restrict the flow of air from the auxiliary reservoir to the brake cylinder and thus allow as much air as possible to enter the brake cylinder from the brake pipe. Approximately 60 lbs. brake cylinder pressure is, therefore, obtained on emergency applications, the air from the brake pipe increasing the cylinder pressure about 20% above the maximum obtainable with a full service application.

Not only does the air vented from the brake pipe give a higher cylinder pressure, but it causes a local drop in brake pipe pressure *at the triple valve*. This sudden drop in pressure causes the next triple valve to apply in "quick-action," and it the next, thus transmitting the quick action from triple valve to triple valve, serially

throughout the train in a very short time, with the result that all the brakes in the train are applied in a small fraction of the time which would be required if all the valves were plain triple valves and all the brake pipe reduction had to be made at the brake valve.

The release after an emergency application is made the same as after a service application, except that it requires a longer time, the brake pipe having to be recharged from zero to slightly above the pressure in the auxiliary reservoirs before the triple valve pistons can move to release position.

HANDLING BRAKES IN TRAIN SERVICE

As the safety of the train on the road depends upon the proper operation of the entire air brake system, from the air compressor on the engine to the brake shoes on the last car, it is of the utmost importance to the engineer: 1st, that he has ample assurance that the various parts of the equipment are in normal working order; 2nd, that he possesses a thorough practical understanding of the operation of the equipment so as to get the most out of the brake under all circumstances. As the conditions to be met vary greatly, it is impossible to give here complete instructions for manipulating the brake at all times. Only the general rules to be observed can be given, leaving detailed instructions for testing, care and maintenance and handling the brakes while on the road to other publications treating these subjects and to the special instructions which each road must necessarily issue to meet its own conditions. Preparatory to making any test of

the brake on the locomotive before attaching it to the train, the brake and air signal pipes should be blown out by opening and closing quickly a number of times the angle and stop cocks at the pilot and the rear of the tender, so as to remove scale or other foreign matter which might be in the pipes or hose and couplings. The gages should then be observed to see that the proper main reservoir and brake pipe pressures are present. This will show that the regulating devices (governors, feed valves, etc.) are properly adjusted. The brake should then be applied and released and its action carefully observed to determine if the various parts of the equipment are in proper operative conditions.

CHARGING AND TESTING

In order to avoid failure of the brakes to release when coupling a locomotive to an empty or partially charged train, a 10-lb. reduction should be made and the brakes then "kicked off" leaving the handle in *Lap* position, then cut in to the train. After coupling to the train, all brake pipe angle cocks should be known to be open except those on the pilot and the rear of the last car and all branch pipe cut-out cocks open and reservoir drain cocks closed. All hand brakes must be released, except where needed to hold the train, if on a grade. Do not attempt to move the train or locomotive until the brake pipe gage hand shows full brake pipe pressure.

In charging the train from the locomotive, the brake valve handle should be left in *Release* position until the brakes are released and the auxiliary reservoirs charged

to the pressure to be carried, then move to *Running* position, where it should always remain when not being operated. Before starting, a test of the brakes should be made and the number of cars, the train tonnage and all other information concerning the train conditions that can be obtained should be ascertained. In testing the brakes a full service application of the brakes should be made and the brake valve handle left in *Lap* position until signal to release is given. In releasing, the brake valve handle should be placed in *Release* position for the proper length of time, depending upon the length of the train, then returned to *Running* position.

OPERATING INSTRUCTIONS

Running

Keep the brake valve handle in *Running* position when not being used.

In event of sudden danger move the handle quickly to *Emergency* position at the extreme right and leave it there until the train stops and the danger is past.

After an emergency application of the brakes while running over the road due to any cause other than intended by the operating engineer himself:

(1) *In passenger service* move the brake valve handle to *Emergency* position at once and leave it there until the train stops.

(2) *In freight service* move the brake valve handle to *Lap* position and let it remain there until the train stops.*

*NOTE:—If such a stop is made on a grade, after the train stops the handle should be moved to emergency position and left there to insure the brakes remaining applied until released by the engineer in charge of the train or until hand brakes can be set to hold the train, if a stop for any length of time is required.

Service Application

This is to prevent loss of main reservoir pressure and insure the brakes remaining applied until released by the engineer in charge of the train. After the train stops the cause of the application should be located and remedied before proceeding.

To apply the brakes, place the brake valve handle in *Service* position until the desired reduction has been made, indicated by the equalizing reservoir pressure hand of the large duplex air gage, then return it to *Lap* position. This causes a corresponding reduction in brake pipe pressure and applies the brakes.

How much the reduction should be and whether a full reduction should be made at once or the brakes graduated on, depends upon the conditions existing in each particular case, such as the speed and weight of the train, condition of rail, grade, kind of stop desired and regard for the comfort of the passengers. The greater the reduction the higher will be the resulting brake cylinder pressure, until the point of equalization (full service application) between the auxiliary reservoir and the brake cylinder pressures is reached. Under normal operating conditions this corresponds to a reduction of 20 lbs. from 70 lbs. brake pipe pressure. Any reduction in brake pipe pressure beyond this point will not cause any increase in brake cylinder pressure, is a needless waste of air and interferes with the proper release of the brakes.

A heavy brake pipe reduction should not be made at low speeds, because the retarding effect of any given reduction is greater at low than at high speeds, and too

heavy a reduction might result in an abrupt stop with perhaps danger to lading, discomfort to passengers or slid flat wheels. The amount of the service reduction should always be in proportion to the speed; for example, in ordinary passenger service a heavy initial reduction should generally be made in order to obtain the most effective retardation possible when the speed of the train is greatest.

If the brakes are applied lightly at first and the braking pressure increased as the speed of the train diminishes, it not only makes a longer stop, but the high brake cylinder pressure at the end of the stop will be likely to produce a rough stop, slid wheels, and result in loss of time.

To properly weigh all these varying factors in every stop becomes, after a little practice, an act of unconscious judgment. Careful attention to cause and effect at the very start and a real desire to improve are the most necessary qualifications in order to become expert in handling this or any other form of brake equipment.

Holding Brakes Applied

When the brake valve handle is left in *Lap* position after an application, the brakes on the entire train will remain applied. This position should therefore be used to hold all the brakes applied between successive reductions when graduating the brakes on, and during the stop until it is desired to release the brakes.

Never allow the brake valve handle to remain in Lap position except when it is desired to hold the brakes ap-

plied and it should not then be allowed to remain in this position a sufficient length of time to permit brake cylinder leakage to materially diminish the braking power.

Releasing

In releasing brakes there are several things which should be borne in mind, such as the length of the train, the speed, the point at which it is desired to stop, the amount of brake pipe reduction which has been made, main reservoir capacity and excess pressure, whether the train is equipped with new standard or old standard triple valves, and any other conditions which may affect the operation of the brakes when the release is made. With the changes in operating conditions and in train and locomotive equipments during the past few years it has become possible to obtain still better results in general train handling if the method of operating the valves is also slightly changed to conform with the progress which has been made in other directions. This is especially true with regard to releasing brakes and the general instructions which follow, are intended to apply particularly to trains having modern equipment, that is, large compressor capacity, large main reservoir volume, high excess pressure, and operating under present day average conditions. They are not intended to apply rigidly to all individual cases or conditions, specific instructions usually being issued by each road to cover its own recommended practice.

Passenger Service. In making the first release of a two-application stop the brake valve handle should be

moved to *Release* position, and then quickly back to *Running* position, where it should be allowed to remain for an instant to permit the pressures in the equalizing reservoir and brake pipe to equalize, then returned to *Lap* position and from there to *Service* position as required.

In making the final release of a two-application stop, with short trains, release just before coming to a standstill by moving the handle to *Release* position and immediately back to *Running* position, and leave it there. With long trains the brakes should, as a rule, be held applied until the train stops.

The release after one-application stop should be made in the same manner as the *final* release of a two-application stop.

Freight Service. Under present conditions it is, as a rule, safest to come to a stop before releasing the brakes on a freight train, especially a long one, rather than attempt to release at low speed. However, if conditions (for example, a short train or a train equipped with Type K Triple Valves) permit of the release while in motion, the brake valve handle should be moved to *Release* position and held there long enough to move as many of the triple valves to release position as possible without unduly overcharging the head end of the train (the time in release position should be governed by the length of train, amount of reduction made, etc.) then returned to *Running* position. A few seconds after such a release, particularly on long trains, it is necessary to again move the handle to *Release* position and back to *Running*

position to "kick off" any brakes at the head end of the train that may have re-applied due to their auxiliary reservoirs having been slightly overcharged. A movement to *Release* position for only an instant, returning to *Running* position immediately, is all that is necessary to accomplish the desired result.

Emergency

Should it become imperative to stop in the shortest possible time, to save life or avoid accident, move the brake valve handle quickly to *Emergency* position, which is at the extreme right, and leave it there until the train has stopped and the danger is past. This should always be done, no matter what position the handle may be in at the time.

Double-Heading

On the second engine of a "double-header" the cut-out cock under the brake valve should be closed and the brake valve handle left in *Running* position. It is of the utmost importance that this cock be closed when double-heading as otherwise the brakes cannot be applied by the first engineer, because any reduction in brake pipe pressure that he might attempt to make would be prevented by the air supplied to the brake pipe through the brake valve on the second engine. The air compressor on the second engine should be permitted to operate as usual so as to keep the main reservoirs charged to standard pressure and furnish the air necessary for the operation of air-using devices, such as water scoop, bell-ringer, sander, etc., and also so that full pressure may be at once avail-

able if the second engineer is called upon by the first to operate the brakes in case of some failure of the apparatus on the first engine.

General

1. It is always best to make a running test with passenger trains after leaving terminals or where engines have been changed. A running test is also conducive to the safety of freight trains, if a suitable place can be found for such purpose. This is especially important when commencing the descent of a steep grade, and should be made while the speed is low, with a sufficient reduction to insure all brake pistons passing over the leakage grooves. The average speed down such grade should be determined and governed by the results of such test.

2. The shorter the train, the shorter will be the discharge at the brake pipe exhaust port, in response to a given reduction of pressure in the equalizing reservoir; this knowledge should indicate to the engineer whether the angle cocks are open between the tender and cars.

3. If a train pulls hard, do not conclude that the brakes are necessarily at fault and keep trying to "kick" them off by repeatedly moving the brake valve handle into *Release* position. If thereby brake pipe pressure becomes greater than that for which the feed valve is adjusted, any subsequent brake pipe leakage will cause the brakes to "creep" on, and, in a hard pull, this may result in "stalling."

4. Watch the air gage as closely as possible.

5. A heavy initial application of the brakes has become the successful practice in making stops with fast passenger trains, in order to obtain a high cylinder pressure when the speed is high, and the holding power of the brakes least; then by releasing after the speed is considerably reduced, and applying again with a smaller reduction, a low brake cylinder pressure is obtained when the speed is low and the holding power of the brakes greater.

6. In moving the brake valve handle back to lap after the first release in a two-application stop, so that the brakes will quickly respond in the second application, it often happens, as when approaching signals, that the engineer brings the train to a slow speed with the first application, then drifts up to the signal with the brake valve on *Lap*. In cases of this kind the greatest care should be taken if, for any reason, the second application becomes unnecessary (for example, the signal going to clear) that the brake valve handle should be moved back to *Release* and then to *Running* position, since if the handle is forgotten and *left in the Lap position,* leaks may deplete the system and the absence of air pressures not be discovered until a stop is required, when no braking power will be found available.

7. In using sand, get it upon the rail and under all the wheels before the speed of the train has been so reduced that wheels are likely to slide. If sand be used while wheels are sliding, bad flat spots are produced, since the application of sand will not cause sliding wheels to revolve.

8. Remember that the driver brakes, in good condition, will hold considerably more than reversing the engine, and that flat drivers result if the engine be reversed when the driver brakes are already applied.

9. In descending a grade, always aim to keep the brake pipe pressure as near the standard as possible; this is accomplished by recharging as frequently as may be necessary for the purpose or wherever the grade, curvature and main reservoir pressure offer an opportunity; this means, as a rule, short holds, slightly heavier initial reductions, but lighter total applications between recharges than in holding longer distances, a quicker recharge and re-application and more uniform speed. This practice also gives greater security, if occasion demands that a stop be made.

10. Where pressure retaining valves are used, make a practice of using them all, either in passenger or freight service, unless the train will run at too slow a speed with all of them in use.

11. Always release the air brakes and set the hand brakes before cutting off from cars on trains to be left standing. This is particularly important on grades. If the hand brakes are not set, or if they are set while the air brakes are still applied, leakage may reduce the holding power of the brakes to practically nothing.

12. When descending a grade, never make an application of the brakes with a sufficient reduction to equalize brake cylinder and auxiliary reservoir pressure, unless it is intended to make a stop, or unless it is the only

way to bring the train under control. Equalization invariably means that a considerable time must elapse before the auxiliary reservoirs are fully recharged, so that the train will have time to attain a greater speed than desirable, thus requiring another heavy application to again bring it under control. The power required to stop from 32 miles per hour is sixteen times as great as that required at 8 miles per hour. Therefore, it is seen that the greatest factor in train control is the speed at which it is running when the brakes are applied, and the greater length of time required for recharging allows a greater speed to be attained, which requires a heavier subsequent application. In other words, keep the speed as low and the auxiliary reservoir pressure as high as circumstances permit. Consequently it is much better to make lighter applications more frequently than heavy applications with a large variation in speed.

13. A reason why it is not good practice to make too heavy applications under any conditions is the possibility of going beyond the equalizing point. If this is done with a train of, say 50 cars or longer, the head brakes will release so long before the brake pipe pressure at the rear can be increased sufficiently to release the rear brakes that severe shocks and possible break-in-two's are likely to result from such condition.

14. In handling freight train on grades, it may be stated, as a general rule, that a medium application while the speed is low will produce the best results. The method above all others to be avoided is that already

mentioned, of obtaining a high speed, then making heavy applications to reduce it (if possible), then taking the time to fully recharge, during which time the train greatly increases in speed, then follow another heavy application, etc. The train can be handled with greater safety and better time in grade work by keeping the speed low and uniform than by permitting extremes.

15. If a hose bursts or a break-in-two occurs on a freight train when on a grade, the hand brakes should be applied immediately on coming to a standstill; for if the brakes leak off there is no means of applying them again by air.

16. The best way to take water on a locomotive hauling a freight train is to stop short of the water plug, cut off, and run up with the locomotive alone.

17. Keep driver and tender brakes in good order; for, on the heavy classes of freight engines, these two brakes furnish as much braking power as from five to six 100,000 lb. capacity cars having a light weight of 40,000 lbs.

CLEANING AND OILING THE TRIPLE VALVE AND BRAKE CYLINDER

The order of work found to be most satisfactory is first to take the triple valve apart and immerse the removable internal metal parts in benzine or gasoline, leaving them there until the work upon the cylinder is completed, next, clean and oil the cylinder. The parts of the triple valve should then be thoroughly cleaned and replaced, after which the strainer should be cleaned, the brake tested,

the piston travel adjusted, the retaining valve tested (and repaired if necessary), and, finally, the cylinder should be stencilled to show the date of cleaning and oiling. The pipe joints should be tested under pressure with soapsuds. The nuts upon the bolts which support the cylinder should always be examined, and tightened, if loose; if they are loose, the movement of the cylinder when the brakes are applied produces leaks in the pipe joints.

Brake Cylinder

Close the branch pipe cut-out cock and drain the auxiliary reservoirs. Fasten the piston sleeve (if a freight brake cylinder) and non-pressure head together with a nail through the hole provided in the sleeve or with a suitable clamp. Remove the nuts from non-pressure head bolts, then remove piston from the cylinder.

Cleaning Cylinders. Scrape the old lubricant from the cylinder wall and leakage groove and wipe these surfaces clean and dry. Kerosene may be used for assisting in cylinder cleaning but must be completely removed to prevent serious damage to the cylinder gaskets and the packing leather. If the cylinder wall is rusted, the rust should be removed with sand paper.

Cleaning Piston and Packing Leather. Remove expander ring from piston. Scrape old lubricant from the metal part and packing leather and wipe all surfaces clean and dry. Leather should be carefully examined and should be renewed if brittle, thin at any point, cut, cracked, or otherwise defective. Examine piston and

follower plate for cracks and tighten up follower plate nuts.

PACKING LEATHER EXPANDER RINGS. Replace the packing leather expander ring with one which has been checked in a special gage designed for this purpose; the displaced ring to be returned to the shop for checking.

APPLYING NEW LEATHERS. Examine follower studs for tightness in the piston. Place the leather centrally on the piston, flesh side against the piston. Place the follower in position. Apply the nuts, bringing them in contact with the follower without tightening. Then draw them down uniformly.

APPLICATION OF LUBRICANT. Apply a thin coating of brake cylinder lubricant to the wall of the cylinder with a brush. Fill the expander ring groove, at the same time coating the inside of the leather and place the expander ring in position.

ASSEMBLING. The piston should be stood on end, with the top edge or flat side of the non-pressure head flange and the opening of the expander ring toward the workman. With the piston in this position, enter it into the cylinder. The sleeve or rod should then be slowly raised and the piston moved into the cylinder until the upper portion of the leather engages the cylinder wall. Form this portion of the leather into the cylinder with a dull edge, round cornered, putty knife or similar instrument, while the sleeve or rod is being gradually raised, taking special care not to crimp or otherwise damage the leather. *Then pull* upward and outward on the sleeve or rod until

it is in horizontal position. Push the piston to its release position and then raise the sleeve or rod to the top of the cylinder to determine whether the expander is in its proper position, which will be indicated by freedom of movement.

Triple Valve

Never remove the movable parts of the triple valve while it is on the car. If the valve is not working properly, or needs cleaning and oiling, take it down and replace it by a valve in good condition. All cleaning and oiling should be done at a bench, by a competent man, where the liability of damage to the internal parts of the valve is least. Any attempt to take the triple valve apart while still on the car is almost sure to result in a large percentage of valves being injured by careless handling or dirt getting inside the pipes or valves. If repairs are necessary, such triple valves should be returned to our shops for that purpose. Our facilities for doing this work are of the best. We can, therefore, do it more quickly, accurately, and guarantee better satisfaction than where it is handled by other shops not so well equipped. Furthermore, it is of the utmost importance that the manufacturer's standards be not departed from if the parts of the apparatus are to be perfectly interchangeable.

In cleaning the triple valve, special care should be given to the slide valve, the graduating valve, the slide valve seat, the packing ring of the triple valve piston, and the emergency rubber-seated valve. In order to avoid springing the triple valve piston ring, it should never be re-

moved except for the purpose of renewal. The triple valve piston ring should be caused to work freely in its groove before replacing.

In lubricating the triple valve, no lubricant should be used on the quick action parts.

All oil, gum or grease should be thoroughly removed from the slide valve and its seat in the bushing and the face of the graduating valve. Use benzine or gasoline to insure this.

The face of the graduating valve, both upper and lower faces of the slide valve, the slide valve seat and the upper portion of the bushing where the slide valve spring bears should be lubricated with a high grade of very fine, dry, pure graphite, rubbing it in so that as much as possible will adhere and fill in the pores of the brass and leave a very light thin coat of graphite.

To apply the graphite, use a stick in the shape of a paddle about 8 inches long, having a small piece of chamois glued to one end. Dip the skin covered end in dry graphite and rub on the surfaces specified. After rubbing, a light blow of the stick on the slide valve seat will leave the desired light coating of loose graphite. When the work is completed the slide valve and its seat must be entirely free from oil or grease. Care should be taken when handling the parts after lubricating that the hands do not come in contact with the lubricated parts as the thin coating of graphite is easily removed.

The triple valve piston ring and the bushing in which it works should be sparingly lubricated by first pushing

the piston to release position and applying a drop or two of oil to the circumference of the piston bushing, spreading it over the surface as uniformly as possible and then moving the piston back and forth several times to insure proper distribution of this oil on the wall of the cylinder. There should be no free oil left on the parts. Care should be taken not to permit any oil to get upon the gaskets or rubber-seated valves.

The graduating and check valve springs should be examined and removed if not in proper condition and the slide valve spring tension should be very light.

PIPING

NOTE:—For more complete specifications for installation, see our publications Nos. 2501 and 2502.

In piping cars, the following points should always be borne in mind: No deviation should ever be made from the sizes of pipe specified in our current Catalogs; the joints should be threaded with sharp dies and made up with a suitable compound, putting it on the male thread only, never inside the fittings. Fins should always be removed from pipe before it is installed; pipe should never be tested without first being blown out by steam or air, and the pipe should be jarred while being blown out, in order to help loosen scale; long, easy bends should be substituted for ells and sharp bends, wherever possible; all pipe joints should be tested under pressure with soapsuds to detect leaks; if there is to be inclination of the pipe on a car, the highest point should be at the center of the car, and sags in the pipe, forming pockets where moisture may collect, must be avoided; all pipe should be

securely clamped to the car to avoid vibration, which eventually produces leaks; special care should be given to the M. C. B. recommendations concerning the location of the angle cock, in order that the hose shall couple properly with foreign cars, and the angle cock key should clear the nearest part of the key by at least one inch.

FOUNDATION BRAKE GEAR

To insure a sufficiently strong, durable and substantial brake gear, the sizes of rods, levers, and pins recommended by the Master Car Builders' Association should be strictly followed. (See M. C. B. Proceedings for 1916, page 798.)

It is important that the rods should be parallel with a longitudinal line through the center of the car when the brakes are applied.

Levers should stand approximately at right angles to the rods when the brakes are applied.

Brake beams should be so hung that the centers of the brake shoes shall be at the standard distance above the rail, as prescribed by the Master Car Builders' Association; and, wherever possible, the brake beams should be so hung that, whether the car be light or loaded, they shall always be at the same distance above the rail. This practice greatly reduces the liability of flat wheels, since the piston travel is not affected by the loading or unloading of the car and may therefore be properly adjusted whether the car be light or loaded.

It is always best to so design the hand and air brakes *that they* shall "work together"; that is, so that all the

levers move in the same direction when the brakes are applied by hand as when applied by air.

In securing brake cylinders to car bodies, an iron plate is much to be preferred to wooden blocks, since the latter shrink, thus loosening the bolts and permitting movement of the cylinder every time the brakes are applied. This movement of the cylinder is imparted to the brake pipe and is a very productive source of leaks.

Triple valves should be so located as to be easy of access for cleaning or repairing.

AMERICAN DRIVER BRAKES

The importance of a good driver brake cannot be emphasized too strongly, not only in order that the very heavy locomotives now used may perform their due share of *train* braking, but because a uniform retardation between the locomotive and cars tends to reduce shock and excessive drawbar stresses.

The weight of the locomotive is always equivalent to the weight of a *number of cars.* Therefore, the ultimate stopping power of a train as a whole, depends directly (and to a much greater extent than is usually appreciated) upon the relative efficiency of the locomotive brakes. For this reason, also, truck and trailer wheels should be braked whenever possible, particularly when a material proportion of the total weight of the locomotive is carried on these wheels.

A well maintained driver brake with flanged shoes will keep the tires in good condition much longer than where this brake receives scant attention, and as a higher mile-

age is thereby secured between tire turnings, the cost of repairs is reduced.

On account of the variation in locomotive construction, most driver brakes must be specially designed, and any information desired in this connection will be supplied by the American Brake Company, St. Louis, Mo.

WESTINGHOUSE AIR BRAKE COMPANY

Pittsburgh, Pa., U. S. A.

WORKS AT WILMERDING, PA.

OFFICES:

ATLANTA	Candler Building
BOSTON	Exchange Building
CHICAGO	Railway Exchange Building
COLUMBUS	Columbus Savings and Trust Building
DENVER	Tramway Building
HOUSTON, TEX.	4802 Main Street
LOS ANGELES	Pacific Electric Building
MEXICO CITY, MEXICO	4a Puente de Alvarado, No. 100
NEW YORK	City Investing Building
PITTSBURGH	Westinghouse Building
ST. LOUIS	Boatmen's Bank Building
ST. PAUL	Endicott Building
SALT LAKE CITY	McIntyre Building
SAN FRANCISCO	Southern Pacific Building
SEATTLE	Securities Building
TOPEKA	Columbian Building
WASHINGTON, D. C.	Munsey Building

TRADE MARK

ASSOCIATED COMPANIES:

WESTINGHOUSE TRACTION BRAKE COMPANY,
Pittsburgh, Pa.

THE AMERICAN BRAKE COMPANY,
St. Louis, Mo.

THE WESTINGHOUSE BRAKE COMPANY, LTD.,
London, England.

WESTINGHOUSE PACIFIC COAST BRAKE COMPANY,
Emeryville, Cal.

WESTINGHOUSE BRAKE COMPANY OF AUSTRALASIA, LTD.,
Concord West, New South Wales, Australia.

CANADIAN WESTINGHOUSE COMPANY, LTD.,
Hamilton, Ontario, Canada.

SOCIETE ANONYME WESTINGHOUSE,
Petrograd, Russia.

COMPAGNIE DES FREINS WESTINGHOUSE,
Sevran, France.

COMPAGNIA ITALIANA WESTINGHOUSE DEI FRENI,
Turin, Italy.

WESTINGHOUSE BREMSEN GESELLSCHAFT,
Hanover, Germany.

P. F. .013-29
3-M—7

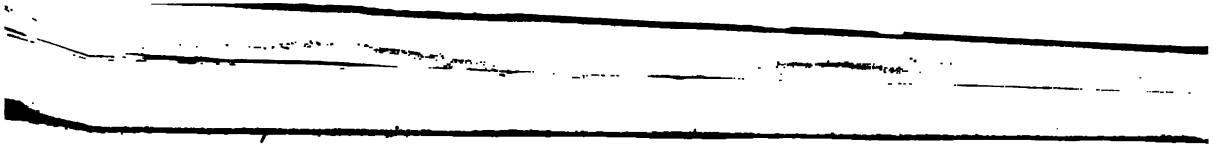

UNIV. OF MICH.

Fig. 1—Quick-Action Automatic Brake Equipment for Passenger Service.

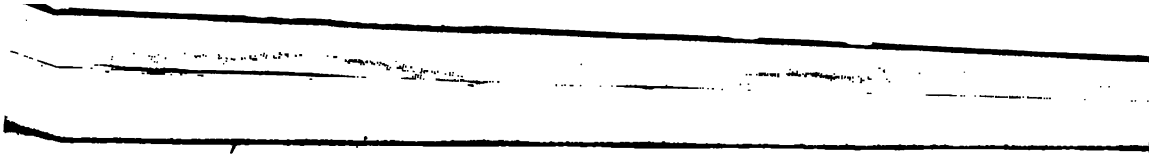

UNIV. OF MICH.

Fig. 1—Quick-Action Automatic Brake Equipment for Passenger Service.

Fig. 37—Running Position

Fig. 38—Service Position

Fig. 39—Lap Position

UNIV. OF MICH.

Fig. 1—Quick-Action Automatic Brake Equipment for Passenger Service.